Digital compact cassette recorder 70DCC900

/ 00S/01S/05S/10S/BK01

Service
Service
Service

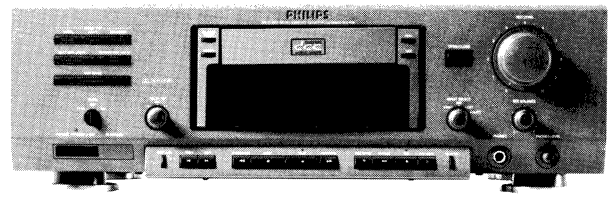

Service Manual

DIGITAL dcc COMPACT CASSETTE

TABLE OF CONTENTS

	PAGE
TECHNICAL SPECIFICATIONS	2
CONNECTIONS AND CONTROLS	3
WARNINGS	4
DISASSEMBLY	5
SERVICE MODES	6
MICROPROCESSOR I/O PINTS AND THEIR FUNCTIONS	11
BLOCK DIAGRAM	13
DESCRIPTION OF SIGNAL NAMES	15
VOLTAGE CHARTS	29
WIRING DIAGRAM	39
SCHEMATIC DIAGRAM AND PARTS LOCATIONS	43
MAIN PCB (PG03) / POWER SUPPLY PCB (PP03) / DC SUPPLY PCB (PS03) / POWER TRANSFORMER TERMINAL PCB (PP63)	43
POWER SUPPLY CIRCUIT (PP03) / POWER TRANSFORMER TERMINAL CIRCUIT (PP63) / POWER CIRCUIT (PG03-1/6) DC SUPPLY CIRCUIT (PS03)	47
μ - COM CIRCUIT (PG03-2/6)	50
MECHA CIRCUIT (PG03-3/6)	53
ANALOG IN, DIGITAL IN/OUT CIRCUIT (PG03-4/6) / REC/BALANCE VOLUME CIRCUIT (PV03)	56
REC/BALANCE VOLUME PCB (PV03)	58
DOLBY, MUTE, ANALOG OUT CIRCUIT (PG03-5/6)	59
HEADPHONE, QMS CIRCUIT (PG03-6/6) / HEADPHONE CIRCUIT (PH03-1/2) / (PH03 2/2)	62
HEADPHONE PCB (PH03)	64
DIGITAL CIRCUIT (PZ03-1/2)	65
DIGITAL CIRCUIT (PZ03-2/2)	68
DIGITAL PCB A/B SIDE (PZ03)	71
READ/WRITE PCB A SIDE (PW03)	75
READ AMP CIRCUIT (PW03-1/2)	76
WRITE AMP CIRCUIT (PW03-2/2)	79
READ/WRITE PCB B SIDE (PW03)	81
A/D CONVERTER CIRCUIT (PA03-1/2)	82
AD/DA PCB (PA03)	85
AD/DA PCB (PA03)	87
D/A CONVERTER CIRCUIT (PA03-2/2)	89
TRAY WIRE CONNECTIVE, SERVO CIRCUIT (PM03)	92
TRAY WIRE CONNECTIVE, SERVO PCB (PM03)	95
FRONT PCB (PD03)	97
FRONT CIRCUIT (PD03)	99
HEAD, DECK MECHANISM AND THEIR INTERFACES	102
ELECTRICAL MEASUREMENTS AND ADJUSTMENTS	106
SET EXPLODED VIEW AND PARTS LIST	129
DECK EXPLODED VIEW AND PARTS LIST	132
ELECTRICAL PARTS LIST	135

Published by Consumer Electronics Printed in The Netherlands © Copyright reserved Subject to modification

4822 725 24161

PHILIPS

PHILIPS

3.98 7 027

TECHNICAL SPECIFICATIONS

FREQUENCY RESPONSE

DIGITAL DCC prerecorded: 20 Hz-20 kHz ± 0.2 dB (fs = 44.1 kHz)

Sample frequencies: 32 kHz, 44.1 kHz, 48 kHz dig. in 44.1 kHz analog input

S/N ratio:	playback ≥ 92 dB
	overall ≥ 92 dB
Dynamic Range:	playback ≥ 95 dB
	overall ≥ 92 dB
THD:	playback ≥ 0.003%
	overall ≥ 0.005%
Channel separation:	playback ≥ 95 dB
	overall ≥ 85 dB
Wow and Flutter:	Quartz Crystal Precision

ANALOG CASSETTE: Playback only

Frequency response:	30 – 16 kHz CrO_2
S/N ratio:	≥ 50 dB CrO_2
Dolby B/C:	Improvement B 10 dB
	Improvement C 20 dB
Wow and Flutter:	0.15 CCIR WTD

signal also supplied to digital outputs

INPUTS

Analog line input:	unbalanced
	impedance > 20 kOhm
Digital Coaxial:	0.5 V/75 Ohm
Digital Optical:	acc. to IEC 958 tos link

OUTPUTS

Analogue fixed:	2 V
Analogue variable:	motorised
Digital Coaxial:	0.5 V/75 Ohm
Digital Optical:	acc. to IEC 958 tos link

HEADPHONE AMPLIFIER PERFORMANCE

Load impedance Range:	8 – 600 Ohm
Frequency range:	20 – 20 kHz, ± 0.5 dB
Signal to Noise ratio – Playback:	90 dB
THD (including noise):	80 dB

MISCELLANEOUS

Display:	16 segment level meter
	2 scales
Remote Control:	ESI bus
Mechanism:	2 motor metal back
Tape-speed level:	4.76 cm/sec
Trayloader system	

CABINET GENERAL

Dimensions (wxhxd)	: 17"x5 4/8"x11 6/8" (435 x 140 x 300mm)
weight	: 19.845 lbs (9kg)

Carbon film 0.125 W or 0.2 W	70°C	5%	
Carbon film 0.25 W or 0.33 W	70°C	5%	
Metal film 0.25 W or 0.33 W	70°C	5%	
Carbon film 0.5 W	70°C	5%	
Carbon film 0.67 W	70°C	5%	
Carbon film 1 W or 1.15 W	70°C	5%	

(C) Chip component

Ceramic plate Tuning ⩽ 120 pF NP.0	2%
Others	−20/+80%
Polyester flat foil	10%
Metalized polyester flat film	10%
Polyester flat foil small size (Mylar)	10%
Polysterene film/foil	1%
Tubular ceramic	
Miniature single	
Subminiature tantalum	± 20%

*a = 2.5 V
b = 3.15 V or 4 V
c = 6.3 V
d = 10 V
e = 16 V
f = 25 V
g = 40 V
h = 63 V
j = 100 V
l = 125 V
m = 150 V
n = 160 V
q = 200 V
r = 250 V
s = 300 V
t = 350 V
u = 400 V
v = 500 V
w = 630 V
x = 1000 V
A = 1.6 V
B = 6 V
C = 12 V
D = 15 V
E = 20 V
F = 35 V
G = 50 V
H = 75 V
I = 80 V

(I)

MODO DI SERVIZIO

1. **Modo di avvio (START):**
   Premete contemporaneamente il tasto di riproduzione (PLAY)(▶) e quello di arresto (STOP)(■), quindi accendete la corrente (POWER-ON).
2. **Funzioni disponibili (da selezionare con il tasto del tempo (TIME KEY):**
   0 elenco scorrevole dei caratteri disponibili per il display
   (Questo succede nel momento in cui accendete la corrente.)
   1 tutti gli elementi del display sono attivati
   2 tutti gli elementi del display si spengono l'uno dopo l'altro
   3 visualizzazione del canale sull'oscilloscopio (selezionate il canale usando i tasti 0...8 del telecomando)
   Tasto del TEMPO : ␣**SET**␣**EYE**␣**CH**␣
   Modo di ARRESTO : **GO**␣**PLAY**␣**MODE**
   Modo di RIPRODUZIONE : **EYE**␣**CH**␣**NO,**␣□
   4 errore del sistema visualizzato per il canale selezionato
   Tasto del TEMPO : **SYS**␣**ERR**␣**RATE**
   Modo di ARRESTO : **GO**␣**PLAY**␣**MODE**
   Modo di RIPRODUZIONE : **ERR**␣**SYS**␣␣□□□
   5 visualizzazione dell'errore ausiliario
   Tasto del TEMPO : **AUX**␣**ERR**␣**RATE**
   Modo di ARRESTO : **GO**␣**PLAY**␣**MODE**
   Modo di RIPRODUZIONE : **ERR**␣**AUX**␣␣□□□
   6 visualizzazione di lievi errori
   Tasto del TEMPO : ␣**MAIN**␣␣**DATA**␣
   Modo di ARRESTO : **GO**␣**PLAY**␣**MODE**
   Modo di RIPRODUZIONE : **MAIN**␣□**CH**␣□□□
   7 visualizzazione della media di tutti gli errori
   Tasto del TEMPO : **ALL**␣**ERR**␣**RATE**
   Modo di ARRESTO : **GO**␣**PLAY**␣**MODE**
   Modo di RIPRODUZIONE : **SA**␣␣**0 1 2 3 4 5 6 7**
   Modo di RIPRODUZIONE immediatamente : □□␣␣□□□□□□□□ cambiamento a 0 ~ F
   8 visualizzazione del tempo reale di tutti gli errori
   Tasto del TEMPO : **ALL**␣**ERR**␣**DISP**
   Modo di ARRESTO : **GO**␣**PLAY**␣**MODE**
   Modo di RIPRODUZIONE : □□␣␣□□□□□□□□
   Il display deve essere stabile tra 0 e 2.
   9 ritorno alla funzione 0
   Modo di ARRESTO : **0**␣**PLAY**␣**MODE**␣

   Le informazioni visualizzate provvengono direttamente da DEQ e DDSP.
   Comunque, le prove da 3 ad 8 non sono disponibili per questo modello.
3. **MODO DI SERVIZIO**
   Premete il tasto di ripristino del contagiri (COUNTER RESET).

MODO FABBRICA

Modo di avvio (START) impostato in fabbrica:

Premete contemporaneamente il tasto di arresto (STOP) (■) e il tasto di ritorno (BACKWARD) (◀◀), quindi accendete la corrente (POWER-ON).

1. Tutti gli elementi del display appariranno dopo alcuni SECONDI : **FACTORY**␣**MODE** (MODO FABBRICA) e i LED "PLAY", "REC" e "STANDBY" si illumineranno.
2. Premete il tasto del tempo (TIME Key) una volta.

2-1. I modi del timer (TIMER SW) appariranno sul display.
Modo di PLAY : □␣**TIMER**␣**PLAY**
Modo di OFF : □␣**TIMER**␣**OFF**␣
Modo di REC : □␣**TIMER**␣**REC**␣
└— Le cifre indicate nel paragrafo 2-2 verranno visualizzate.

2-2. Controllate la durata della cassetta DCC ed anche il meccanismo SW.

Display	DURATA (durata della cassetta)			REC SW (protezione)	TIME min.
	0	1	2		
0	OFF	OFF	OFF	OFF nessuna protezione (REC è attivato.)	45
1	ON	OFF	OFF		60
2	OFF	ON	OFF		75
3	ON	ON	OFF		90
4	OFF	OFF	ON		105
5	ON	OFF	ON		120
6	ON	ON	ON		
7	ON	ON	ON		* 1
8	OFF	OFF	OFF	ON protezione (REC è inattivato.)	* 2
9	ON	OFF	OFF		45
A	OFF	ON	OFF		60
B	ON	ON	OFF		75
C	OFF	OFF	ON		90
D	ON	OFF	ON		105
E	ON	ON	ON		120
F	ON	ON	ON		

Lato dell'interruttore : Nastro
OFF (APERTO) : Con foro
ON (CHIUSO) : Senza foro

*1 Quando non è stata inserita nessuna cassetta.
*2 Quando la cassetta è stata inserita.

2-3. Alla pressione di ciascun tasto marcatore (MARKER Key), il display cambierà al modo numerico.
Alla pressione di uno dei tasti marcatori (MARKER Key), il display numerico cambierà.
AUTO Key : **1**␣**TIMER**␣□□□
WRITE Key : **2**␣**TIMER**␣□□□
RENUMBER Key : **3**␣**TIMER**␣□□□
NEXT Key : **4**␣**TIMER**␣□□□
REV Key : **5**␣**TIMER**␣□□□
ERASE Key : **6**␣**TIMER**␣□□□
Fate riferimento al MODO FABBRICA 4 per ulteriori informazioni riguardanti il display.

3. Premete il tasto del tempo (TIME Key) una volta.

3-1. In questo caso, il modo di invecchiamento (anche OK per la cassetta compatta analogica)
SECONDI : ␣␣␣ **AGEING** ␣␣␣ all'installazione di una cassetta.
→ Riproduzione (PLAY) → Arresto (STOP) → Avanzamento rapido (FF)(▶▶) → Riavvolgimento (REW)(◀◀) → Aperto (OPEN) → Chiuso (CLOSE) →
Circa 90 sec.

4. Premeto il tasto del tempo (TIME) una volta.

4-1. In tal caso, la registrazione (REC) sarà diretta (premete, semplicemente, il tasto di registrazione (REC), quindi la registrazione avrà inizio).
Nel caso in cui premete il tasto di riavvolgimento (REW) (◀◀) durante la registrazione, la registrazione si arresterà dopo il riavvolgimento finchè non si raggiunge la posizione iniziale del disco. (Il marcatore non apparirà nel modo di arresto.)

5. Premeto il tasto del tempo (TIME) una volta.
Ritorno ad 1.

MODO DI SERVIZIO
Premete il tasto di ripristino del contagiri (COUNTER RESET).

(D)

SERVICE-BETRIEB

1. **START des Service-Betriebes:**
   Drücken Sie die Tasten PLAY(▶) und STOP(■) gleichzeitig und dann POWER-ON.
2. **Es stehen folgende Funktionen zur Verfügung (mit der TIME-KEY-Taste zu wählen).**
   0 Fortlaufende Liste der verfügbaren Bildschirm-Zeichen
   (Dieses wird sofort nach dem Einschalten der Netzspannung (POWER-ON) durchgeführt.
   1 Alle Bildschirmelemente ein
   2 Alle Bildschirmelemente einzeln ausschalten
   3 Anzeige des "Augen-Kanales" auf dem Oszilloskop (Differenz der Amplitudenschwingung).
   (Wählen Sie den Kanal) mit der Fernbedienung 0...8)
   ZEIT-Taste : ␣**SET**␣**EYE**␣**CH**␣
   STOP-Betrieb : **GO**␣**PLAY**␣**MODE**
   PLAY-Betrieb : **EYE**␣**CH**␣**NO,**␣□
   4 Anzeige der System-Fehlerrate des gewählten Kanals
   ZEIT-Taste : **SYS**␣**ERR**␣**RATE**
   STOP-Betrieb : **GO**␣**PLAY**␣**MODE**
   PLAY-Betrieb : **ERR**␣**SYS**␣␣□□□
   5 Anzeige der AUX-Fehlerrate
   ZEIT-Taste : **AUX**␣**ERR**␣**RATE**
   STOP-Betrieb : **GO**␣**PLAY**␣**MODE**
   PLAY-Betrieb : **ERR**␣**AUX**␣␣□□□
   6 Anzeige der Haupt-Fehlerrate
   ZEIT-Taste : ␣**MAIN**␣␣**DATA**␣
   STOP-Betrieb : **GO**␣**PLAY**␣**MODE**
   PLAY-Betrieb : **MAIN**␣□**CH**␣□□□
   7 Anzeige aller mittleren Fehlerraten
   ZEIT-Taste : **ALL**␣**ERR**␣**RATE**
   STOP-Betrieb : **GO**␣**PLAY**␣**MODE**
   PLAY-Betrieb : **SA**␣␣**0 1 2 3 4 5 6 7**
   Sofortiger PLAY-Betrieb: □□␣␣□□□□□□□□
   Jeweils 0 ~ F wechseln
   8 Anzeige aller Fehlerraten in Echtzeit
   ZEIT-Taste : **ALL**␣**ERR**␣**DISP**
   STOP-Betrieb : **GO**␣**PLAY**␣**MODE**
   PLAY-Betrieb : □□␣␣□□□□□□□□
   Es ist OK., wenn die Anzeige zwischen 0 und 2 stabil ist.
   9 Zurück zu Funktion 0
   STOP-Betrieb : **0**␣**PLAY**␣**MODE**␣

   Die angezeigte Information kommt direkt von DEQ und DDSP.
   Test 3 bis 8 können jedoch bei diesem Model nicht durchgeführt werden.
3. **ENDE DES SERVICE-BETRIEBES**
   Drücken Sie die COUNTER RESET-Taste (Zählwerk-Rückstellung).

WERK-BETRIEB

START, Werksseitige Einstellung :
Drücken Sie gleichzeitig die Taste STOP (■) und BACK-WARD (◀◀) und dann POWER-ON.

1. Nach einigen Sekunden der
   ANZEIGE : **FACTORY**␣**MODE,**
   werden alle Anzeige-Elemente angezeigt und die LED's für "PLAY", "REC" und "STAND-BY" leuchten auf.
2. Drücken Sie einmal die "TIME Key"-Taste.

2-1. Es werden die Modi des TIMER SW angezeigt
PLAY-Betrieb : □␣**TIMER**␣**PLAY**
OFF-Betrieb : □␣**TIMER**␣**OFF**␣
REC-Betrieb : □␣**TIMER**␣**REC**␣
↑— Die in Paragraph 2-2 genannten Ziffern werden angezeigt.

2-2. Überprüfen Sie die Länge der DCC-Cassette und des SW-Mechanismus.

Anzeige	LÄNGE (Speildauer des Cassettenbandes)			REC SW (Geschützt)	TIME (Zeit) min.
	0	1	2		
0	OFF	OFF	OFF	OFF Ungeschützt (REC ist möglich.)	45
1	ON	OFF	OFF		60
2	OFF	ON	OFF		75
3	ON	ON	OFF		90
4	OFF	OFF	ON		105
5	ON	OFF	ON		120
6	ON	ON	ON		
7	ON	ON	ON		* 1
8	OFF	OFF	OFF	ON Geschützt (REC ist unmöglich.)	* 2
9	ON	OFF	OFF		45
A	OFF	ON	OFF		60
B	ON	ON	OFF		75
C	OFF	OFF	ON		90
D	ON	OFF	ON		105
E	ON	ON	ON		120
F	ON	ON	ON		

Schalter-Seite : Band-seite
AUS (OFFEN) : Mit Loch
EIN (GESCHLOSSEN) : Ohne Loch

*1 Wenn keine Cassette eingelegt ist.
*2 Wenn eine Musikcassette eingelegt ist.

2-3. Wenn eine der MARKER Key -Tasten gedrückt wird, wechselt die Anzeige auf numerische Anzeige.
Wenn eine der MARKER Key -Tasten gedrückt wird, wechselt die numerische Anzeige.
AUTO-Taste : **1**␣**TIMER**␣□□□
WRITE-Taste : **2**␣**TIMER**␣□□□
RENUMBER-Taste : **3**␣**TIMER**␣□□□
NEXT-Taste : **4**␣**TIMER**␣□□□
REV-Taste : **5**␣**TIMER**␣□□□
ERASE-Taste : **6**␣**TIMER**␣□□□
Für die Anzeige, siehe FACTORY MODE 4.

3. Drücken Sie die TIME Key -Taste einmal.
3-1. In diesem Fall, Ageing Mode (Auch bei analogen Compakt-Cassetten OK).
ANZEIGE : ␣␣␣**AGEING** ␣␣␣ wenn eine Cassette eingelegt ist.
→ PLAY → STOP → FF(▶▶) → REW(◀◀) → OPEN → CLOSE →
Etwa 90 Sek.
4. Drücken Sie einmal die Zeit-Taste (TIME).
4-1. In diesem Fall, Direkt REC (Nur die REC -Taste drücken, um die Aufnahme zu starten).
Wird während der Aufnahme die REW-Taste (◀◀) gedrückt, so wird die Aufnahme nach dem Rücklauf bis zum Anfang der Aufnahme beendet. (Der Merker wird bei Abbruch der Aufnahme nicht gesetzt.)
5. Drücken Sie einmal die Zeit-Taste (TIME).
Zurück zu 1.

ENDE DES WERK-BETRIEB :
Drücken Sie COUNTER RESET-Taste (Zählwerk-Rückstellung).

(F)

MODE SERVICE

1. Mode service démarrage (START) :
Appuyez simultanément sur les touches de lecture (PLAY)(▶) et d'arrêt (STOP)(■), puis sur la touche de mise en marche (POWER-ON).

2. Fonctions disponibles (sélection à l'aide de la touche durée (TIME KEY):

0 feuilleter la liste des caractères d'affichage disponibles
(Cette opération est effectuée dès que l'appareil est mis sous tension.)

1 tous les éléments d'affichage en fonction

2 éteinte de tous les éléments d'affichage, un par un

3 canal oculaire de l'affichage sur l'oscilloscope (sélectionnez le canal à l'aide des télécommandes 0...8)
Touche TEMPS : ␣**SET**␣**EYE**␣**CH**␣
Mode ARRET : **GO**␣**PLAY**␣**MODE**
Mode LECTURE : **EYE**␣**CH**␣**NO,**␣□

4 taux d'erreurs du système d'affichage du canal choisi
Touche TEMPS : **SYS**␣**ERR**␣**RATE**
Mode ARRET : **GO**␣**PLAY**␣**MODE**
Mode LECTURE : **ERR**␣**SYS**␣␣□□□

5 taux d'erreurs de l'affichage aux
Touche TEMPS : **AUX**␣**ERR**␣**RATE**
Mode ARRET : **GO**␣**PLAY**␣**MODE**
Mode LECTURE : **ERR**␣**AUX**␣␣□□□

6 taux d'erreurs principal de l'affichage
Touche TEMPS : ␣**MAIN**␣␣**DATA**␣
Mode ARRET : **GO**␣**PLAY**␣**MODE**
Mode LECTURE : **MAIN**␣□**CH**␣□□□

7 moyenne de taux d'erreurs de l'affichage
Touche TEMPS : **ALL**␣**ERR**␣**RATE**
Mode ARRET : **GO**␣**PLAY**␣**MODE**
Mode LECTURE : **SA**␣␣**0 1 2 3 4 5 6 7**
Mode LECTURE immédiatement :
□□␣␣□□□□□□□□
changé tous les 0 ~ F

8 affichage du taux d'erreurs en temps réel
Touche TEMPS : **ALL**␣**ERR**␣**DISP**
Mode ARRET : **GO**␣**PLAY**␣**MODE**
Mode LECTURE : □□␣␣□□□□□□□□
Il est correct d'obtenir un affichage stable entre 0 et 2.

9 retour à la fonction 0
Mode ARRET : **0**␣**PLAY**␣**MODE**␣

L'information affichée arrive directement de DEQ et DDSP.
Cependant, les tests 3 à 8 ne s'appliquent pas à ce modèle.

3. Fin de mode maintenance
Appuyez sur COUNTER RESET.

MODE USINE

Mode de démarrage d'usine (START) :
Appuyez sur la touche arrêt (STOP) (■) et recul (BACKWARD) (◀◀) simultanément, puis sur la touche de mise en marche (POWER-ON).

1. Tous les éléments d'affichage s'allument après quelques secondes sur l'affichage (DISPLAY) : les témoins lumineux de mode de réglage d'usine (**FACTORY** ␣**MODE**) et de lecture (PLAY), d'enregistrement ("REC") et d'attente ("STANDBY") s'allument.
2. Appuyez sur la touche TIME Key une fois.

2-1. Les modes sur la minuterie TIMER SW sont affichés.
Mode PLAY : □␣**TIMER**␣**PLAY**
Mode OFF : □␣**TIMER**␣**OFF**␣
Mode REC : □␣**TIMER**␣**REC**␣
└— Les chiffres du paragraphe 2-2 sont affichés.

2-2. Vérifiez la durée de la cassette DCC, et SW (mécanisme SW).

Affichage	TIME (Durée de lecture de la bande de cassette)			Commutateur enr REC SW (Protection)	TIME min.
	0	1	2		
0	OFF	OFF	OFF	OFF Aucune protection (REC possible.)	45
1	ON	OFF	OFF		60
2	OFF	ON	OFF		75
3	ON	ON	OFF		90
4	OFF	OFF	ON		105
5	ON	OFF	ON		120
6	ON	ON	ON		
7	ON	ON	ON		* 1
8	OFF	OFF	OFF	ON Protection (REC impossible.)	* 2
9	ON	OFF	OFF		45
A	OFF	ON	OFF		60
B	ON	ON	OFF		75
C	OFF	OFF	ON		90
D	ON	OFF	ON		105
E	ON	ON	ON		120
F	ON	ON	ON		

Côté commutateur (SWITCH) : Côté de cassette (TAPE)
OFF (OUVERT) : Avec trou
ON (FERME) : Sans trou

*1 Lorsqu'aucune cassette n'est insérée.
*2 Lorsqu'une cassette musique est insérée.

2-3. Lorsque chaque touche MARKER Key est enfoncée, l'affichage change au mode numérique.
Lorsque chaque touche MARKER Key est enfoncée, le mode numérique est changé.
Touche AUTO Key : **1**␣**TIMER**␣□□□
Touche WRITE Key : **2**␣**TIMER**␣□□□
Touche RENUMBER Key : **3**␣**TIMER**␣□□□
Touche NEXT Key : **4**␣**TIMER**␣□□□
Touche REV Key : **5**␣**TIMER**␣□□□
Touche ERASE Key : **6**␣**TIMER**␣□□□
Reportez-vous à la section FACTORY MODE 4 pour l'affichage.

3. Appuyez sur TIME Key une fois.

3-1. Dans ce cas, c'est le mode de vieillissement (également bon en cassette compacte analogique)
AFFICHAGE : ␣␣␣ **AGEING**␣␣␣ lorsqu'une cassette est insérée.
→ Lecture PLAY → Arrêt STOP → Avance rapide FF(▶▶) → Recul REW(◀◀) → Ouverture OPEN → Fermeture CLOSE
Approx. 90 sec.

4. Appuyer une fois sur la touche de temps (TIME).

4-1. Dans un tel cas, Direct REC (Il suffit d'appuyer sur la touche REC et l'enregistrement démarre).
Si la touche REW (◀◀) est enfoncée au cours de l'enregistrement, l'enregistrement s'arrête après le recul jusqu'à la position de début du disque, (Le curseur n'est pas affiché lorsque l'enregistrement s'arrête.)

5. Appuyer une fois sur la touche de temps (TIME).
Retour à 1.

Fin de mode maintenance
Appuyez sur COUNTER RESET.

(NL)

ONDERHOUDSTAND

1. **START onderhoudstand:**
   Druk terzelfdertijd op weergave (PLAY)(▶) en STOP (■)en druk daarna op spanning aan (POWER-ON).
2. **Beschikbare funkties (kiezen met de tijdtoets (TIME KEY):**
   0 lijst van beschikbare displaytekens
   (Dit gebeurt van zodra de spanning wordt ingeschakeld (POWER-ON).
   1 alle display-elementen aan
   2 alle display-elementen één voor één uit
   3 toon het "oog"-kanaal op de oscilloscoop
   (kies het kanaal met de toetsen 0 tot 8 van de afstandsbediening)
   Tijdtoets : **␣SET␣EYE␣CH␣**
   STOP-stand : **GO␣PLAY␣MODE**
   PLAY-stand : **EYE␣CH␣NO,␣□**
   4 toon foutenmarge van het systeem voor het gekozen kanaal
   Tijdtoets : **SYS␣ERR␣RATE**
   STOP-stand : **GO␣PLAY␣MODE**
   PLAY-stand : **ERR␣SYS␣␣□□□**
   5 toon foutenmarge van aux
   Tijdtoets : **AUX␣ERR␣RATE**
   STOP-stand : **GO␣PLAY␣MODE**
   PLAY-stand : **ERR␣AUX␣␣□□□**
   6 toon hoofdfoutenmarge
   Tijdtoets : **␣MAIN␣␣DATA␣**
   STOP-stand : **GO␣PLAY␣MODE**
   PLAY-stand : **MAIN␣□CH␣□□□**
   7 toon gemiddelde foutenmarge van alles
   Tijdtoets : **ALL␣ERR␣RATE**
   STOP-stand : **GO␣PLAY␣MODE**
   PLAY-stand : **SA␣␣0 1 2 3 4 5 6 7**
   onmiddellijk weergavestand
   (PLAY-stand) : □□␣␣□□□□□□□□
   elk veranderd 0 ~ F
   8 toon foutenmarge van alles in real time
   Tijdtoets : **ALL␣ERR␣DISP**
   STOP-stand : **GO␣PLAY␣MODE**
   PLAY-stand : □□␣␣□□□□□□□□
   Het is in orde als de display tussen 0 en 2 stabiel blijft.
   9 terug naar funktie 0
   STOP-stand : **0␣PLAY␣MODE␣**

   De getoonde informatie komt rechtstreeks van DEQ en DDSP.
   Tests 3 tot 8 zijn evenwel niet beschikbaar voor dit model.
3. **BEEINDIGEN ONDERHOUDSTAND**
   Druk op teller terugstellen (COUNTER RESET).

FABRIEKSTAND

START-fabrieksstand :
Druk terzelfdertijd op STOP (■) en BACKWARD (◀◀) en druk daarna op spanning aan (POWER ON).

1. Alle display-elementen ingeschakeld na enkele sekonden van
   DISPLAY : **FACTORY␣MODE** (fabrieksstand), en weergave- ("PLAY"), opname- ("REC") en "STAND BY"-LEDS lichten op.
2. Druk éénmaal op de tijdtoets (TIME Key).

2-1. De standen van timerschakelaar (TIMER SW) worden weergegeven.
PLAY-stand : □ **␣TIMER␣PLAY** (weergave)
OFF-stand : □ **␣TIMER␣OFF␣** (uit)
REC-stand : □ **␣TIMER␣REC␣** (opname)
↑ De getallen in paragraaf 2-2 verschijnen in de display.

2-2. Kontroleer de lengte van de DCC-cassette en de schakelaar (schakelmechanisme).

Display	DUUR (duur van de cassette)			opname-schakelaar (REC SW) (Beveiligd)	Tijd (TIME) in minuten
	0	1	2		
0	OFF	OFF	OFF	OFF (uit) geen beveiliging (opname (REC) is mogelijk.)	45
1	ON	OFF	OFF		60
2	OFF	ON	OFF		75
3	ON	ON	OFF		90
4	OFF	OFF	ON		105
5	ON	OFF	ON		120
6	ON	ON	ON		
7	ON	ON	ON		* 1
8	OFF	OFF	OFF	ON (aan) beveiligd (opname (REC) is niet mogelijk.)	* 2
9	ON	OFF	OFF		45
A	OFF	ON	OFF		60
B	ON	ON	OFF		75
C	OFF	OFF	ON		90
D	ON	OFF	ON		105
E	ON	ON	ON		120
F	ON	ON	ON		

SCHAKELAARZIJDE : CASSETTEZIJDE
(SWITCH) (TAPE)
uit (OFF) (OPEN) : Met opening
aan (ON) : Zonder opening (GESLOTEN)

*1 Zonder cassette.
*2 Met cassette.

2-3. Als u op alle merktoetsen (MARKER Key) drukt, schakelt de display over op numerieke stand.
Als u op alle merktoetsen (MARKER Key) drukt, verandert de numerieke display.
AUTO Key : **1␣TIMER␣**□□□
WRITE Key : **2␣TIMER␣**□□□
RENUMBER Key : **3␣TIMER␣**□□□
NEXT Key : **4␣TIMER␣**□□□
REV Key : **5␣TIMER␣**□□□
ERASE Key : **6␣TIMER␣**□□□
Wij verwijzen u naar fabriekstand 4 (FACTORY MODE) voor de display.

3. Druk éénmaal op de tijdtoets (TIME Key).
3-1. Verouderingsstand, in dit geval (ook OK in Analoge compacte cassette)
DISPLAY : ␣␣␣ AGEING␣␣␣ wanneer er een cassette is ingelegd.
→ PLAY → STOP → FF(▶▶) → REW(◀◀) → OPEN → CLOSE →
Ongeveer 90 sekonden

4. Druk eenmaal op de tijdtoets (TIME).
4-1. In dit geval rechtstreeks opnemen (REC) Druk op de opnametoets (REC), waarna de opname begint).
Als u tijdens de opname op de terugspoeltoets (REW◀◀) drukt, wordt de band teruggespoeld tot op de beginpositie van de opname, waarna de opname stopt.
(Het merkteken voor het stoppen voor opname wordt niet geschreven.)
5. Druk eenmaal op de tijdtoets (TIME).
Terug naar 1.

BEEINDIGEN ONDERHOUDSTAND :
Druk op teller terugstellen (COUNTER RESET).

(GB)

SERVICE MODE

1. START service mode :

Press PLAY (▶) key and STOP (■) key together and then POWER-ON.

2. Functions available (select with TIME key) :

0 scrolling list of available display characters
(This performs as soon as turning POWER-ON.)

1 all display elements on

2 all display elements off one by one

3 display eye channel on oscilloscope
(select channel by using remote controls 0...8)
TIME key : **␣SET␣EYE␣CH␣**
STOP mode : **GO␣PLAY␣MODE**
PLAY mode : **EYE␣CH␣NO,␣□**

4 display system error rate for chosen channel
TIME key : **SYS␣ERR␣RATE**
STOP mode : **GO␣PLAY␣MODE**
PLAY mode : **ERR␣SYS␣␣□□□**

5 display aux error rate
TIME key : **AUX␣ERR␣RATE**
STOP mode : **GO␣PLAY␣MODE**
PLAY mode : **ERR␣AUX␣␣□□□**

6 display main error rate
TIME key : **␣MAIN␣␣DATA␣**
STOP mode : **GO␣PLAY␣MODE**
PLAY mode : **MAIN␣□CH␣□□□**

7 display all error rate average
TIME key : **ALL␣ERR␣RATE**
STOP mode : **GO␣PLAY␣MODE**
PLAY mode : **SA␣␣0 1 2 3 4 5 6 7**
immediately PLAY MODE : □□␣␣□□□□□□□□
changed each 0 ~ F

8 display all error rate real time
TIME key : **ALL␣ERR␣DISP**
STOP mode : **GO␣PLAY␣MODE**
PLAY mode : □□␣␣□□□□□□□□
It is OK, if the display is stable between 0 and 2.

9 back to function 0
STOP mode : **0␣PLAY␣MODE␣**

Displayed information is directly coming from DEQ and DDSP.
However, the tests from 3 to 8 are not available on this model.

3. END :

Press COUNTER RESET key.

FACTORY MODE

START Factory mode :
Press STOP (■) key and BACKWARD (◀◀) key together and then POWER-ON.

1. All of display elements on after several seconds of DISPLAY : **FACTORY␣MODE**,
and "PLAY", "REC" and "STAND BY" LEDS lights.
2. Press TIME key once.

2-1. The modes on TIMER SW are displayed.
PLAY mode : □**␣TIMER␣PLAY**
OFF mode : □**␣TIMER␣OFF␣**
REC mode : □**␣TIMER␣REC␣**
└── The numerals in paragraph 2-2 are displayed.

2-2. Make sure the length of DCC cassette, and SW (SW mechanism).

Display	LENGTH Run time of cassette tape			REC SW (Protect)	TIME min.
	0	1	2		
0	OFF	OFF	OFF	OFF No Protect (REC is able.)	45
1	ON	OFF	OFF		60
2	OFF	ON	OFF		75
3	ON	ON	OFF		90
4	OFF	OFF	ON		105
5	ON	OFF	ON		120
6	ON	ON	ON		
7	ON	ON	ON		*1
8	OFF	OFF	OFF	ON Protect (REC is inable.)	*2
9	ON	OFF	OFF		45
A	OFF	ON	OFF		60
B	ON	ON	OFF		75
C	OFF	OFF	ON		90
D	ON	OFF	ON		105
E	ON	ON	ON		120
F	ON	ON	ON		

SWITCH side : TAPE side
OFF (Open) : With hole
ON (Closed) : without hole

*1 When no cassette is installed.

*2 When music tape is installed.

2-3. When each MARKER key is pressed, display is changed to numeral mode.
When each MARKER key is pressed, numeral display is changed.

AUTO key : **1␣TIMER␣**□□□□
WRITE key : **2␣TIMER␣**□□□□
RENUMBER key : **3␣TIMER␣**□□□□
NEXT key : **4␣TIMER␣**□□□□
REV key : **5␣TIMER␣**□□□□
ERASE key : **6␣TIMER␣**□□□□

Refer to paragraph 2-1 for the display.

3. Press TIME key once.

3-1. In this case, Ageing mode (Also OK in Analog compact cassette)
DISPLAY : **␣␣␣AGEING␣␣␣**
when a cassette is installed.
→ PLAY → STOP → FF(▶▶) → REW(◀◀) → OPEN → CLOSE
Approx. 90 sec.

4. Press TIME key once.

4-1. In this case, Direct REC (Just press REC key, then recording starts).
If REW (◀◀) key is pressed while recording, recording stops after rewinding until start position of the record, (The marker when stopping to record is not written.)

5. Press TIME key once.
Back to 1.

END :
Press COUNTER RESET key.

DISASSEMBLY

REMOVING THE TOP COVER

Remove the seven screws ① ~ ⑦.

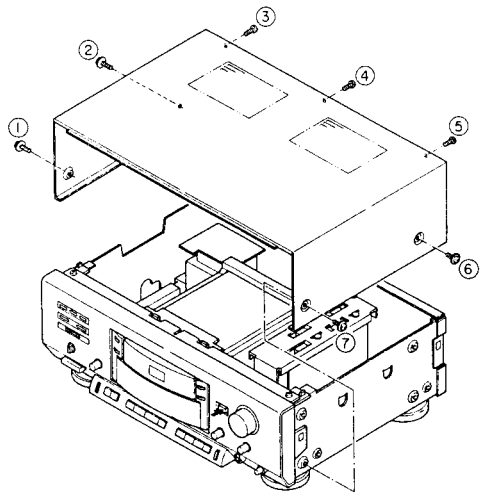

REMOVING THE CASSETTE COVER

1) Push the OPEN/CLOSE button and remove the tray.
2) To unlock the tray panel, press the ② and ③ of the rocking knobs as shown in arrow direction.
3) Remove the tray panel 4 drawing it as shown in arrow direction.

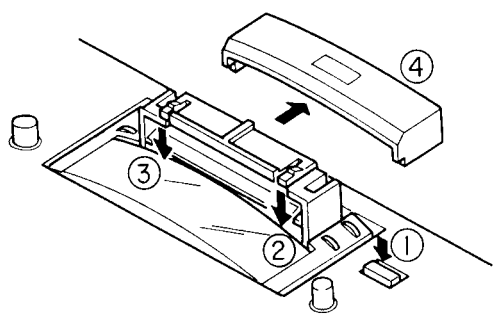

REMOVING THE FRONT PANEL

Remove the four screws ① ~ ④.

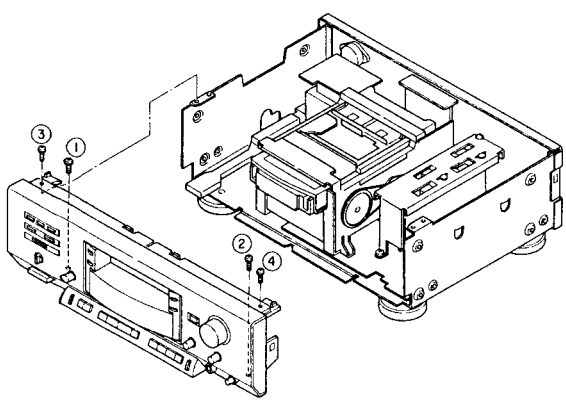

REMOVING THE LOADER (TRAY MECHANISM)

Remove the 4 screws ① ~ ④.

REMOVING THE DECK MECHANISM

1) Remove the 4 screws ① ~ ④.
2) Remove the 4 screws ⑤ ~ ⑧.

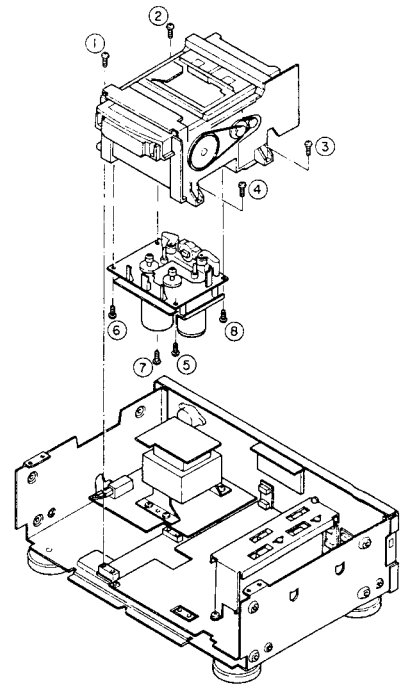

REMOVING THE POWER SUPPLY P.C.B.

Remove the 5 screws ① ~ ⑤.

REMOVING THE MAIN P.C.B.

Remove the 10 screws ⑦ ~ ⑯ and remove the spacer r.

REMOVING THE DIGITAL P.C.B. AND AD/DA PC.B.

Draw out each P.C.B. as shown in arrow direction.

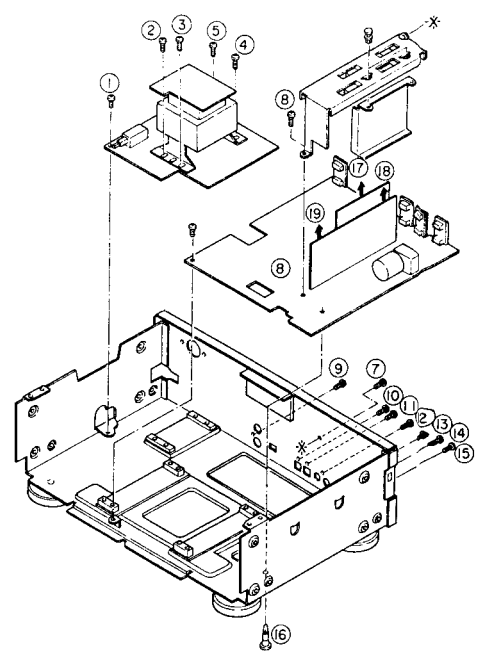

(GB) WARNING

All ICs and many other semi-conductors are susceptible to electrostatic discharges (ESD).
Careless handling during repair can reduce life drastically.
When repairing, make sure that you are connected with the same potential as the mass of the set via a wrist wrap with resistance.
Keep components and tools also at this potential.

ESD

(NL) WAARSCHUWING

Alle IC's en vele andere halfgeleiders zijn gevoelig voor electrostatische ontladingen (ESD).
Onzorgvuldig behandelen tijdens reparatie kan de levensduur drastisch doen verminderen.
Zorg ervoor dat u tijdens reparatie via een polsband met weerstand verbonden bent met hetzelfde potentiaal als de massa van het apparaat.
Houd componenten en hulpmiddelen ook op ditzelfde potentiaal.

(F) ATTENTION

Tous les IC et beaucoup d'autres semi-conducteurs sont sensibles aux décharges statiques (ESD).
Leur longévité pourrait être considérablement écourtée par le fait qu'aucune précaution n'est prise à leur manipulation.
Lors de réparations, s'assurer de bien être relié au même potentiel que la masse de l'appareil et enfiler le bracelet serti d'une résistance de sécurité.
Veiller à ce que les composants ainsi que les outils que l'on utilise soient également à ce potentiel.

(D) WARNUNG

Alle ICs und viele andere Halbleiter sind empfindlich gegen elektrostatische Entladungen (ESD).
Unsorgfältige Behandlung bei der Reparatur kann die Lebensdauer drastisch vermindern.
Sorgen sie dafür, dass Sie im Reparaturfall über ein Pulsarmband mit Widerstand mit dem Massepotential des Gerätes verbunden sind.
halten Sie Bauteile und Hilfsmittel ebenfalls auf diesem Potential.

(I) AVVERTIMENTO

Tutti IC e parecchi semi-conduttori sono sensibili alle scariche statiche (ESD).
La loro longevità potrebbe essere fortemente ridatta in caso di non osservazione della più grande cauzione alla loro manipolazione.
Durante le riparazioni occorre quindi essere collegato allo stesso potenziale che quello della massa dell'apparecchio tramite un braccialetto a resistenza.
Assicurarsi che i componenti e anche gli utensili con quali si lavora siano anche a questo potenziale.

HANDLING CHIP COMPONENTS

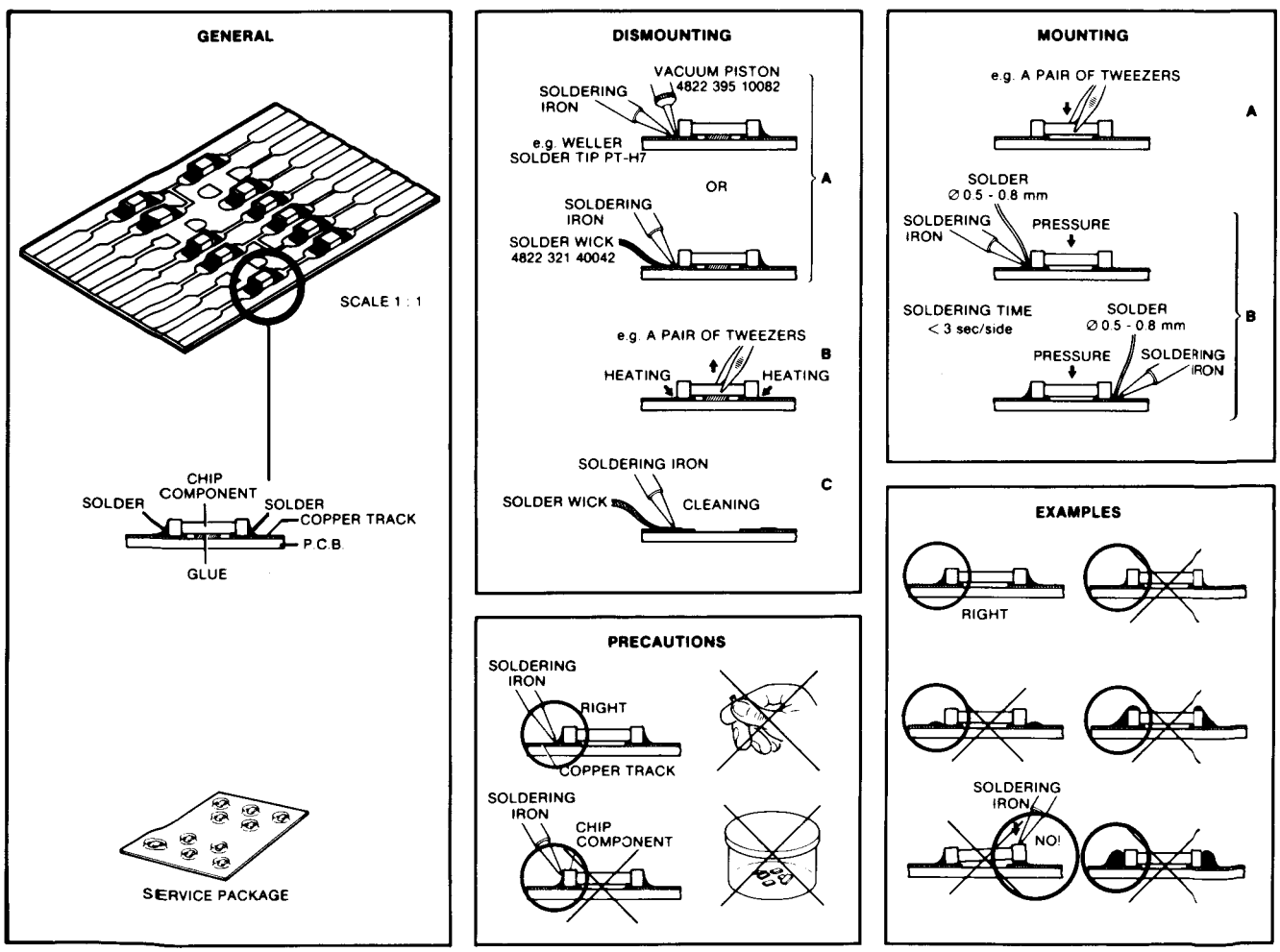

CONNECTIONS AND CONTROLS

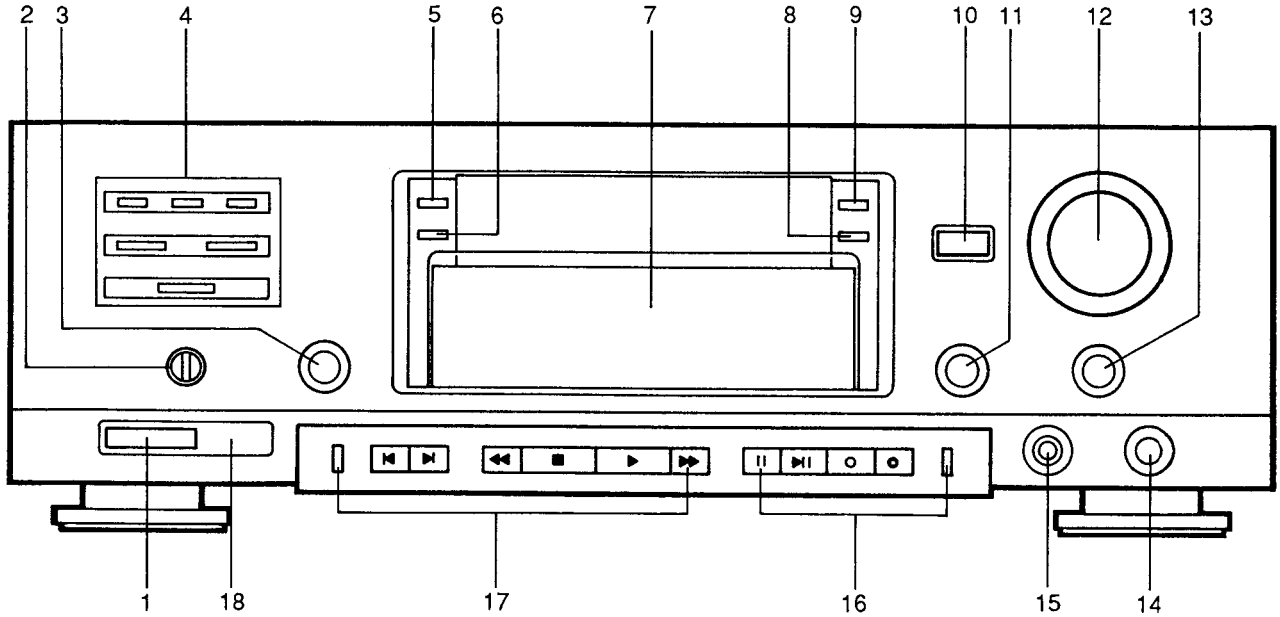

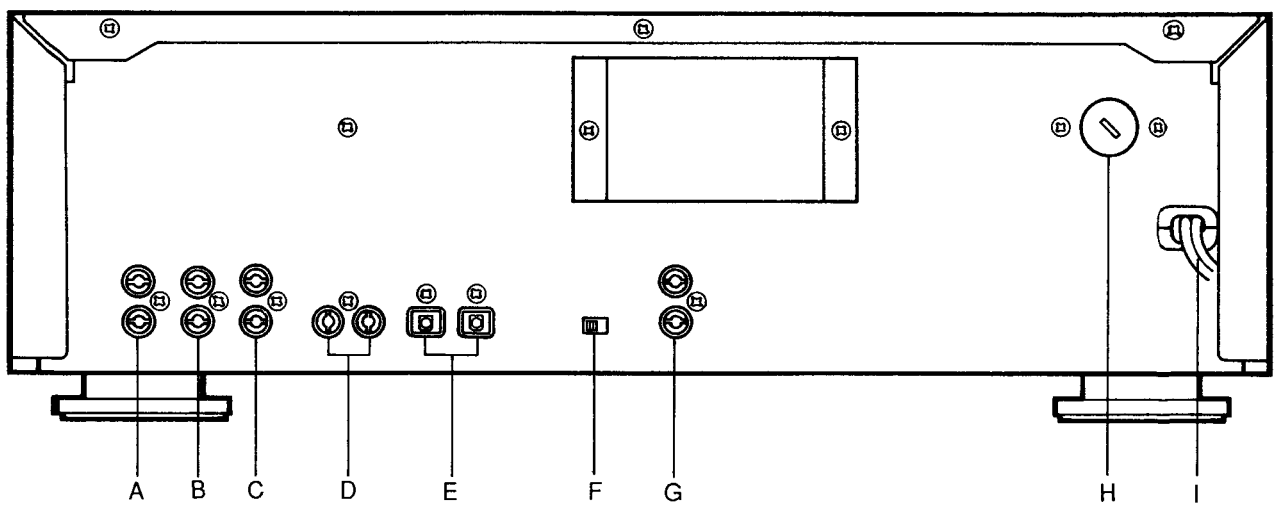

1	Power standby/off switch	S851
2	Timer play/off/rec switch	SD31
3	Dolby NR switch	SD32
4	Marker control switch	SD10 ~ SD14, SD23
5	Counter reset switch	SD19
6	Repeat switch	SD01
7	Display	VD01
8	Time switch	SD21
9	Text switch	SD20
10	Open/close switch	SD17
11	Input select switch	SD33
12	Rec level control	RV01
13	Rec balance control	RV02
14	Phones level control	RH01
15	Phones	JH02
16	Recording control switch	SD09, SD15, SD16, SD22, SD24
17	Playback control switch	SD02 ~ SD08
18	IR sensor	QD02

A	Variable out	J741
B	Fixed out	J740
C	Line in	J742
D	Digital coaxial in/out	JA03
E	Optical in/out	JA01, JA02
F	IR sensor on/off switch	SR01
G	ESI bus	JR01
H	Voltage selector	J091
I	Mian cord	W001

MICROPROCESSOR I/O PINS AND THEIR FUNCTIONS

QD01: μPD75P238

Pin No.	Port Name		I/O	Act	Function
1	AN0	MODEL SELECT	I	H	Model name sensor
2	AVREF	AVREF	–	–	AD converter reference voltage, +5V
3	AVDD	AVDD	–	–	AD converter power supply, +5V
4	VDD	VDD	–	–	VDD, +5V
5	VDD	VDD	–	–	VDD, +5V
6	X2	X2	–	–	Main clock, 4.19MHz
7	X1	X1	–	–	Main clock, 4.19MHz
8	IC	–	–	–	GND
9	XT2	–	–	–	N. C.
10	XT1	–	–	–	GND
11	Vss	Vss	–	–	Vss, GND
12	S16	18	O	H	Segment output
13	S17	17	O	H	Segment output
14	S18	16	O	H	Segment output
15	S19	15	O	H	Segment output
16	S20	N	O	H	Segment output
17	S21	R	O	H	Segment output
18	S22	K	O	H	Segment output
19	S23	H	O	H	Segment output
20	S0	P	O	H	Segment output *Key scan output in common
21	S1	J	O	H	Segment output *Key scan output in common
22	S2	M	O	H	Segment output *Key scan output in common
23	S3	G	O	H	Segment output *Key scan output in common
24	S4	F	O	H	Segment output
25	S5	E	O	H	Segment output
26	S6	D	O	H	Segment output
27	S7	C	O	H	Segment output
28	S8	B	O	H	Segment output
29	S9	A	O	H	Segment output
30	VDD	VDD	–	–	VDD, +5V
31	VLOAD	VLOAD	–	–	–30V power supply for display
32	T15	13G	O	H	Digit output
33	T14	15G	O	H	Digit output
34	T13	14G	O	H	Digit output
35	T12	1G	O	H	Digit output
36	T11	2G	O	H	Digit output
37	T10	3G	O	H	Digit output
38	T9	4G	O	H	Digit output
39	T8	5G	O	H	Digit output
40	T7	6G	O	H	Digit output
41	T6	7G	O	H	Digit output
42	T5	8G	O	H	Digit output
43	T4	9G	O	H	Digit output
44	T3	10G	O	H	Digit output
45	T2	11G	O	H	Digit output
46	T1	12G	O	H	Digit output
47	T0	16G	O	H	Digit output
48	VDD	VDD	–	–	VDD, +5
49	P83	–	–	–	GND
50	P82	–	–	–	GND
51	P81	–	–	–	GND
52	P80	–	–	–	GND
53	P73	TRAY CLOSE	O	H	Tray open output
54	P72	TRAY OPEN	O	H	Tray close output
55	P71	VOL. DOWN	O	H	Motor volume up
56	P70	VOL. UP	O	H	Motor volume down
57	P63	–	–	–	N. C.
58	P62	ACK	I/O	L	Communication with Mecha μ-com
59	P61	REDY	I	L	Communication with Mecha μ-com
60	P60	START	I/O	H	Communication with Mecha μ-com
61	P53	KEY 7	I	H	Key input
62	P52	KEY 6	I	H	Key input
63	P51	KEY 5	I	H	Key input
64	P50	KEY 4	I	H	Key input
65	Vss	Vss	–	–	Vss, GND
66	P43	KEY 3	I	H	Key input
67	P42	KEY 2	I	H	Key input
68	P41	KEY 1	I	H	Key input
69	P40	KEY 0	I	H	Key input
70	P33	DIS OFF	O	H	Display OFF output
71	P32	STAND BY LED	O	L	Stand-by LED lights
72	P31	REC LED	O	L	REC LED lights
73	P30	PLAY LED	O	L	PLAY LED lights
74	P23	–	–	–	N. C.
75	P22	RC-5 OUT	–	–	N. C.
76	P21	RC-5 MASK	I	L	Remote control input inhibit
77	P20	EASY LINK OUT	O	L	Easy Link output
78	P13	CD EDIT	–	–	CD edit
79	P12	–	–	–	N. C.
80	P11	EASY LINK SELECT	I	→	Easy Link/RC-5 input selection High: RC-5, Low: EASY
81	P10	REMOTE IN	I	L	Remote control input
82	SI0	SI	I	L	Communication data input with mecha μ-com
83	SO0	SO	O	L	Communication data output with mecha μ-com
84	$\overline{SCK0}$	SCK	I	L	Communication clock with mecha μ-com
85	P00	–	–	–	GND
86	$\overline{RESET}$	RESET	I	L	Reset
87	AVss	AVss	–	–	AD converter Vss, GND
88	AN7	–	–	–	N. C.
89	AN6	TRAY SW	I	H	Tray position sensor
90	AN5	TIMER SW	I	H	Timer Rec/Timer PLAY sensor
91	AN4	DOLBY SW	I	H	Dolby OFF/B/C sensor
92	AN3	SELECTOR	I	H	Optical/Coaxial/Analog input sensor
93	AN2	LEVEL METER (R)	I	H	Level meter input, Rch
94	AN1	LEVEL METER (L)	I	H	Level meter input, Lch

QU01: μPD75P518

Pin No.	Port Name		I/O	ACT	Function
1	AN0	QMS	I	H	Blank sensor input
2	AVREF	AVREF	–	–	AD converter reference voltage, +5V
3	VDD	VDD	–	–	VDD, +5V
4	VDD	VDD	–	–	VDD, +5V
5	P113	LTEN SBC	O	H	SBC enable output
6	P112	LTEN DSP	O	H	DDSP enable output
7	P111	LTEN DAI	O	H	DAI enable output
8	P110	LTEN EQU	O	H	DEQ enable output
9	P103	LT CONT 0	O	H	IC mode control
10	P102	LT CONT 1	O	H	IC mode control
11	P101	CS	–	–	N. C.
12	P100	U SYNC I	O	L	U bit data, Indicator output
13	P93	DATA IN	I	–	N. C.
14	P92	–	–	–	N. C.
15	P91	IM START	I	L	U bit data, message start input
16	P90	U SYNC O	I	L	U bit data, indicator input
17	P83	–	–	–	GND
18	P82	–	–	–	N. C.
19	P81	–	–	–	N. C.
20	P80	PWM CAP	–	–	N. C.
21	P73	BRK SOL 2	O	L	Brake solenoid drive, Low
22	P72	BRK SOL 1	O	L	Brake solenoid drive, High
23	P71	TRG SOL	O	L	Trigger solenoid drive
24	P70	CAP MOTOR	O	L	Capstan motor drive
25	P63	PWM	–	–	N. C.
26	P62	SPEED	O	→	Reel motor control Low: High speed, High: Low speed
27	P61	REV	O	H	Reel motor control, Reverse
28	P60	FWD	O	H	Reel motor control, Forward
29	P53	POWER DOWN	I	L	Mecha reset when Power is OFF
30	P52	LABEL	I	H	Label sensor
31	P51	VERGIN	I	H	Virgin tape sensor
32	P50	–	–	–	GND
33	Vss	Vss	–	–	Vss, GND
34	P43	–	–	–	N. C.
35	P42	–	–	–	N. C.
36	P41	–	–	–	N. C.
37	P40	–	–	–	N. C.
38	P33	–	–	–	N. C.
39	P32	SET-SY	–	–	N. C.
40	P31	ATT DAC	–	–	N. C.
41	P30	ACK	I/O	L	Communication with Front μ-com
42	P23	START	O	L	Communication with Front μ-com
43	P22	REDY	I/O	H	Communication with Front μ-com
44	P21	DIS FRT	O	L	Communication with Front μ-com
45	P20	SI0 IN/OUT	O	L	Communication with Front μ-com
46	TI0	AUX ENV	I	P	AUX label sensor
47	INT 2	START SEG	I	L	Interface sync signal
48	INT 1	IRQU	I	H	U bit data information indicator input
49	INT 0	T-REEL	I	P	Take-up reel pulse
50	SI0	LT DATA IN	I	L	LT interface data input
51	SO0	LT DATA OUT	O	L	LT interface data output
52	$\overline{SCK0}$	LT CLOCK	O	L	LT interface data clock
53	INT4	S-REEL	I	P	Supply reel pulse
54	Vss	Vss	–	–	Vss, GND
55	XT1	XT1	–	–	GND
56	XT2	XT2	–	–	N. C.
57	IC	–	–	–	GND
58	X1	X1	–	–	Main clock, 4.19MHz
59	X2	X2	–	–	Main clock, 4.19MHz
60	$\overline{RESET}$	RESET	I	L	Reset
61	P143	DOLBY C	O	L	Dolby IC control
62	P142	DOLBY OFF	O	H	Dolby IC control
63	P141	P.B/REC	O	→	Rec/Play output Low: Rec, High: PLAY
64	P140	DCC/$\overline{ACC}$	O	→	DCC/ACC output High: DCC, Low: ACC
65	P133	LINE MUTE	O	H	Mute output
66	P132	48K	O	H	Line out gain control
67	P131	44K	O	H	Line out gain control
68	P130	DE-ENPHASIS	O	H	Emphasis ON output
69	P123	TAPE IN	I	→	Tape loaded/unloaded sensor Low: loaded, High unloaded
70	P122	DCC/ACC IN	I	→	ACC/DCC Tape sensor Low: ACC, High: DCC
71	P121	LEADER	I	H	Quick sensor detection
72	P120	MODE SW	I	→	Head base position sensor High: Stop, Low: Play
73	AVss	A Vss	–		AD converter Vss,GND
74	AN7	REC PROTECT	I	→	Rec enable/inhibited Low: inhibited, High : enable
75	AN6	TAPE LENGTH 0	I	→	DCC tape length sensor Detects the length with 3-pin ON/OFF matrix
76	AN5	TAPE LENGTH 1	I	→	
77	AN4	TAPE LENGTH 2	I	→	
78	AN3	DEBUG 0	–	–	
79	AN2	DEBUG 1	–	–	
80	AN1	DEBUG 2	–	–	

BLOCK DIAGRAM

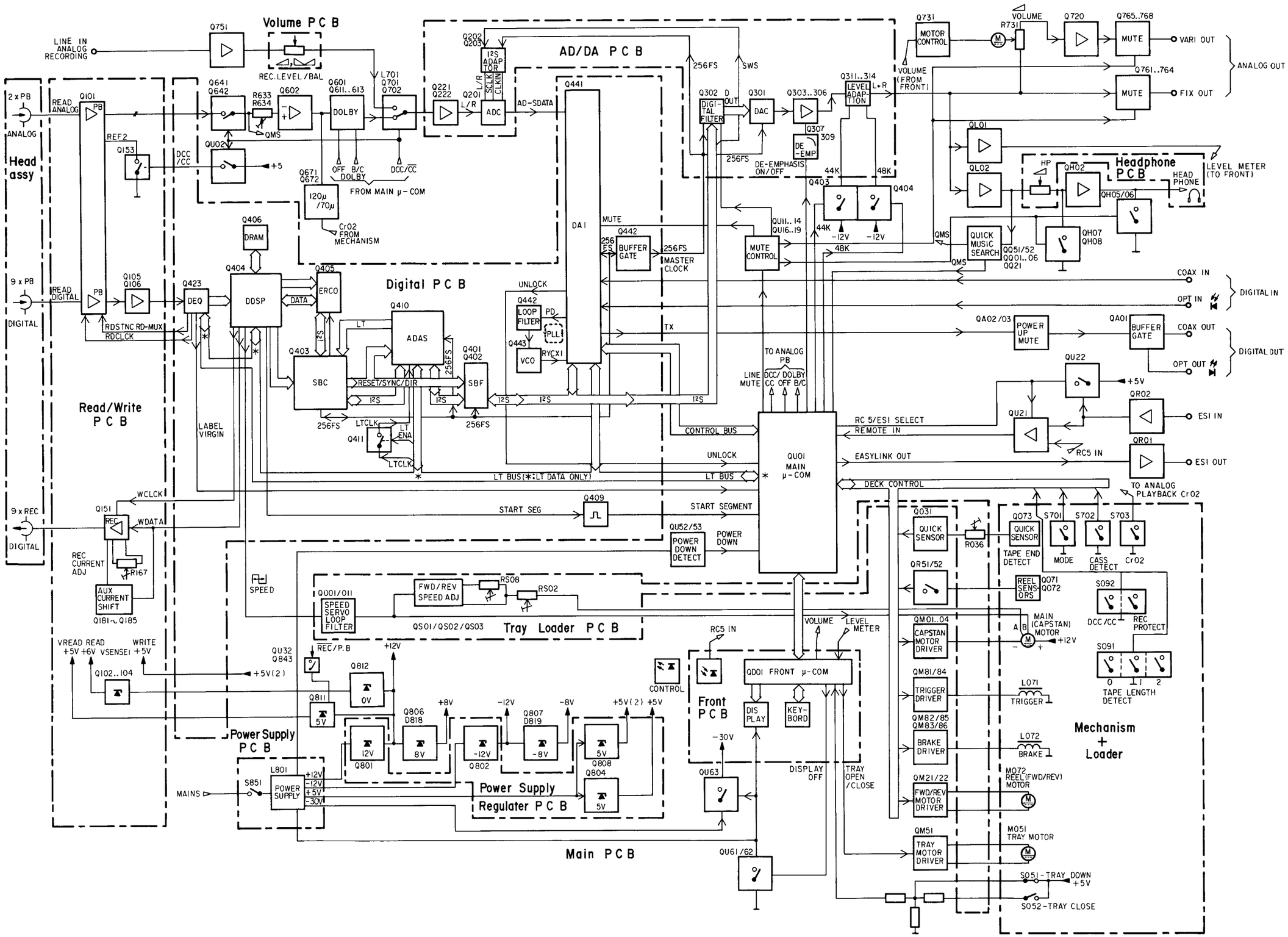

PCS 67 038

Description of signal names

Signal name	*Signal flow*	*Function*	*Explanation*
128Fs	SBC → n.c.	clock	Clock output from SBC, 128 x sampling frequency.
256Fs	SBC ↔ DAI SBC → SBF SBC → ADC SBC → DAC SBC → ADAS	system clock	Master clock signal (256 x sampling frequency) for SBF, DAI, ADC, DAC and ADAS. Is generated by SBC with exception of the mode Digital Record. In that case the DAI is the MASTER and supplies 256Fs and all other related signals. For DAB (digital audio broadcast) Fs = 32 kHz/48 kHz. For CD (compact disc) Fs = 44.1 kHz For DCC (own recording) Fs = 48 kHz, 44.1 kHz (analog source)
ADRS0 ADRS1 ADRS2 ADRS3 ADRS4 ADRS5 ADRS6 ADRS7	DDSP → DRAM	address lines	8 address lines to DRAM to locate an address for writing data into or reading data from memory.
ADSDI	DAI ← ADC	analog/digital serial data input	DAI input for serial data from AD convertor (see also SDATA).
AENV	DEQ → μC	alternating envelope	Monitors during DCC search mode the start of a track (from auxiliary channel signal).
ATT	dig filter ← μC	attenuation	Data input for digital filter to set its attenuation register.
ATTDAC	SBC → n.c.	attenuate DAC	Control line (output from SBC) connected to DAC attenuation input.
AUX	DEQ → DDSP	auxiliary channel output	Sliced output from DEQ of auxiliary channel data (bit rate 12 kb/s) routed to DDSP input TAUX.

Signal name	*Signal flow*	*Function*	*Explanation*
AZCHK	DDSP → test pin	azimuth check	Monitors the azimuth of channels 0 and 7 (output of DDSP).
BCKI	dig filter ← I²S	bit clock input	Clock signal input for digital filter according I²S format (see also SCL).
BCKO	dig filter → DAC	bit clock output	Clock signal output from digital filter according I²S format to DAC clock input SCKI. See also SCL and SCKI.
CH0 CH1 CH2 CH3 CH4 CH5 CH6 CH7	DEQ → DDSP	channel n	DEQ channel n output to DDSP inputs TCH0..TCH7.
CKI	dig filter ← SBC or DAI	clock input	256Fs (256 x sampling frequency) clock input for digital filter. See also 256Fs.
CKSL	→ dig filter	clock selection	Input for digital filter to discriminate between used clock frequencies. CKSL=0; clock = 256Fs CKSL=1; clock = 384Fs
CLAB	ERCO ↔ SBC	I²S bit clock	Bit clock I/O from ERCO directly connected to SBC I/O SBCL pin (see also SBCL).
CLK22	SBC → n.c.	22.5792 MHz clock output	
CLK24	SBC → DDSP SBC → DEQ SBC → ADAS	24.576 MHz master clock	Master clock from SBC to DDSP, ADAS and DEQ to determine the length of tape frame and inter frame gap. In case of a digital recording this clock is not synchron with the sampling frequency and its related frequencies, coming from the DAI (see also F24).
DAAB	ERCO ↔ SBC	serial data (I²S)	Bidirectional I²S serial data line between ERCO and SBC (see also SBDA).

Signal name	*Signal flow*	*Function*	*Explanation*
DATA0 DATA1 DATA2 DATA3 DATA4 DATA5 DATA6 DATA7	ERCO ↔ DDSP	data line n	Parallel data lines for symbol transfer between ERCO and DDSP. DDSP is the master.
DEEMDAC	SBC ↔ n.c.	deemphasize DAC	Control line for DAC
DIGEYE	DEQ → test pin	digital eye output	Serial data output signal to obtain digital eye pattern to test equalization performance of the channels. See also VAL.
DIN	dig filter ← I^2S	data input	Serial data input according I^2S format.
DOEN	DAC ← n.c.	data output enable	One-bit digital output enable; when LOW, the one-bit code outputs are made available for further digital processing.
DOL	dig filter → DAC	digital output left	Serial data output of digital filter offered to SDI1 input of DAC. See also SDI1.
	DAC → n.c.		
DOR	dig filter → DAC	digital output right	Serial data output of digital filter offered to SDI2 input of DAC. See also SDI2.
	DAC → n.c.		
ED0 ED1 ED2 ED3 ED4 ED5 ED6 ED7 ED8 ED9	DDSP ↔ ERCO	Erco data line	Bidirectional parallel databus between DDSP and ERCO.

Signal name	*Signal flow*	*Function*	*Explanation*
EFAB	ERCO → SBC	Error flag	I^2S error flag directly connected to SBC input SBEF to give the error status of bytes being transferred during data playback (see also SBEF).
F24	DDSP ← SBC DEQ ← SBC	24.576 MHz master clock	Master clock from SBC to DDSP and DEQ to determine the length of tape frame and inter frame gap. In case of a digital recording this clock is not synchron with the sampling frequency and its related frequencies, coming from the DAI (see also CLK24).
FDA	SBF ↔ ADAS SBC ↔ ADAS	filtered data	Bidirectional serial data line between SBF and ADAS. Bidirectional serial data line between SBC and ADAS. Data transfer in I^2S format, carrying 32 sub-band channels digital audio data (see also FDAF and FDAC). Each SWS period 2x18 bits data are transferred.
FDAC	ADAS ↔ SBC	filtered data	Filtered data transfer between ADAS and SBC (see also FDA).
FDAF	ADAS ↔ SBF	filtered data	Filtered data transfer between ADAS and SBF (see also FDA).
FDIR	SBC → SBF SBC → ADAS	direction control	Control line output from SBC to SBF and ADAS to indicate the mode of operation. FDIR=1; decoding mode (sub-band synthesis) FDIR=0; encoding mode (sub-band analysis).
FLAG1 FLAG2	ERCO ↔ DDSP	data bus flag	Data lines for symbol transfers between ERCO and DDSP. DDSP acts as the master (see also ED8 and ED9).
FRESET	SBC → SBF SBC → ADAS	filter reset	Reset output from SBC to cause a general reset for SBF and ADAS.

Signal name	*Signal flow*	*Function*	*Explanation*
FSYNC	SBC → SBF SBC → ADAS	filter synchro-nization	At filter sync, with a repetition rate of Fs/32, the transfer of the 2x32 sub-band samples is started. Fsync ensures each SBF is synchronized with the SBC to permit only transfer of sub-band 0 data during FSYNC.
IFL	DDSP → ERCO	imposed flag	During the ERCO encoding mode the IFL line from DDSP is used to force the symbol currently transferred to the ERCO to become a parity symbol during ERCO encoding.
IMSTRT	DAI → μC	information message start	Control line from DAI to main μC to indicate the start of a message transfer.
INHERCO	DDSP → ERCO	inhibit ERCO	Control line output of DDSP to inhibit the ERCO for settings transfer. These settings determine whether the ERCO should encode or decode (see also SETINH).
INTL+ INTL-	DAC → L-ch	integrator left	Analog output of the DAC (outputs from the left positive and negative switched-capacitor integrator) to the left channel amplifier stage.
INTR+ INTR-	DAC → R-ch	integrator right	Analog output of the DAC (outputs from the right positive and negative switched-capacitor integrator) to the right channel amplifier stage.
IOSC	ERCO ← SBC	input oscil-lator	Oscillator input for ERCO coming from the sub-band coder SBMCLK output. The nominal frequency is 6.144 MHz. See also SBMCLK.
IRQU	DAI → μC	information request mi-crocontroller	Control line to indicate the main micro-controller information can be read.

Signal name	*Signal flow*	*Function*	*Explanation*
I²S-bus		inter IC sound	3-line serial bus consisting of a line for two time-multiplexed audio data channels, a word select line for indication of the channel being transmitted (left or right) and a clock line. The lines are called SD, WS and SCK. The device which generates the SCK and WS is the master. See also SCK, SWS and SDA.
LABEL	DEQ → μC	label	Search mode label detection output of DEQ signals that a label is found in the AUX-channel. When DCC player is in search mode, the tape speed increases. LABEL information is encoded throughout its length. To examine the length of a label, the tape speed must be known. In search mode DEQ assesses the speed of labelled tapes. The microcontroller obtains this information via the LT-interface.
LRCI	dig filter ← I²S	L/R clock input	Word clock input for the digital filter, connected to SWS control line of I²S-interface. Data from DIN (data in) is latched into the left- and right input registers on alternate transitions of the word clock. See also SWS.
LT-Bus	μC → DAI μC → ADAS μC → DEQ μC → DDSP		LT-interface is used for the system control of the digital panel. The LT-interface consists of clock-, data-, control- and enable lines.
LTCLK	μC → DAI μC → ADAS μC → DEQ μC → DDSP	LT-clock	Bit clock line for the LT-interface. Main microcontroller supplies the bit clock and acts as master whilst the other devices perform as slaves.
LTCNT0 LTCNT1	μC → DAI μC → ADAS μC → DEQ μC → DDSP	LT control lines	Control lines of the LT-interface output from main microcontroller. LTCNTn determine the type of transfer to occur across the LTDATA serial data line to/from microcontroller.

Signal name	*Signal flow*	*Function*	*Explanation*
LTDATA	μC → DAI μC → ADAS μC → DEQ μC → DDSP	LT data	Bidirectional serial data line of the LT-interface from/to microcontroller. Direction of data transfer is dependant on the information on LTCNT0 and LTCNT1.
LTENA LT-ADAS	μC → ADAS	LT enable ADAS	Activates the LT-interface of the ADAS in case LTENA =1.
LTEN LT-DAI	μC → DAI	LT enable DAI	Activates the LT-interface of the DAI in case LTEN (on DAI) =1.
LTEN LT-DDSP	μC → DDSP	LT enable DDSP	Activates the LT-interface of the DDSP in case LTEN (on DDSP) =1.
LTENDEQ LT-DEQ	μC → DEQ	LT enable DEQ	Activates the LT-interface of the DEQ in case LTENDEQ =1.
LT-Subbus LTCLKC LTCNT0C LTCNT1C LTDATAC LTENC	ADAS → SBC	LT-interface	LT-interface for communication between SBC and ADAS. Here the ADAS is the master.
MCLK	DDSP → ERCO	master clock	MCLK line of the DDSP provides the 6.144 MHz master clock signal and is connected to the MCLK input of the ERCO. This clock (128 x Fs) is used for the symbols transfer between DDSP and ERCO.
MODE0 MODE1	DAI ← μC	mode selection input	Control lines from the microcontroller to select the operation mode of the DAI. DAI operates in μC mode when both lines are at '0' level.
MPCL	DDSP → ERCO	clock phase reference	The MPCL output of the DDSP provides the 3.072 MHz (64 x Fs) clock phase reference signal which is connected to the MPCL input of the ERCO.
MSTCK	DAI ↔ 256Fs	master clock	Bidirectional master clock line. Dependant on CKSEL settings the master clock is at 128Fs or256 Fs. See also 256Fs.

Signal name	*Signal flow*	*Function*	*Explanation*
MUTE	DAI ← μC	mute audio	Control line from microcontroller to mute the digital audio interface. The audio output of the DAI is kept zero when the PLL is not locked in the reception mode (see also UNLOCK).
	dig fiter ← μC		Set the internal digital attenuation register to its maximum, causing an infinite attenuation. In this case audio output is muted. On digital filter data sheet the pin is called MLE (mode set latch enable).
MUTEDAC	SBC → n.c.	mute DAC	control output line of SBC for D/A convertor.
NER0 NER1 NER2	ERCO → test connector	number of erasures	The NERx outputs produce an indication of the number of erasures encountered in the code word currently being processed.
OEN	DDSP → DRAM	output enable	Output enable for DRAM.
OERDCB	DDSP → ERCO	output enable for ERCO	Indication for the ERCO to output data on the data bus lines (DATA1..DATA7, FLAG1 and FLAG2).
PD1 PD2	DAI → VCO	phase detector	Phase detector output from DAI for the charge pump of the VCO. The VCO locks to incoming frequencies on digital input. When locked the DAI supplies the 256Fs master clock.
PRGSTAT	DDSP → n.c.	program status	DDSP program status output.
RASN	DDSP → DRAM	row address strobe negative	row address strobe for DRAM.
RDATA0 RDATA1 RDATA2 RDATA3	DDSP ↔ DRAM	RAM data bus	Bidirectional data bus between DDSP and DRAM. On DRAM IC these lines are called DQ1..DQ4.

Signal name	*Signal flow*	*Function*	*Explanation*
RDCLK	DEQ → read amp	read clock	Data clock (960 kHz) for the read amplifier. The data of 8 data channels and 1 aux channel is transferred during 10 RDCLK periods.
RDMUX	read amp → DEQ	read multiplex	Read multiplexer output from read amplifier to DEQ. See also VIN.
RDSYNC	DEQ → read amp	read synchronization	Control output of DEQ to read amplier to synchronize the read amplifier multiplexer and the DEQ demultiplexer.
READB	DDSP → ERCO	read enable	Read enable for ERCO. When active the ERCO reads data from DDSP on data bus ED0..ED9.
RESET	→ ADAS → SBC → DDSP → DAI → dig filter	reset	Hardware reset (power up) from +5 voltage supply.
RESETC	DDSP → ERCO	reset erco	Control output from DDSP to ERCO to reset ERCO.
RST	RESET → dig filter	reset	Hardware reset for digital filter (see also RESET).
RX1	DAI ← COAX in	receive data	Receive digital data according IEC format digital audio for coaxial input.
RX2	DAI ← OPT in	receive data	Receive digital data according IEC format digital audio for optical input.
RXCKI	DAI ← VCO	receive clock input	Input for VCO frequency (256Fs).
RXCKO	DAI → VCO	receive clock output	Output for VCO frequency (256Fs).
RXSEL	DAI ← 0	receiving mode selection	Selection between reception inputs RX1 and RX2.

Signal name	*Signal flow*	*Function*	*Explanation*
SBCL	SBC ↔ ERCO	sub-band clock	SBCL line is part of the S(ub)-B(and)-I²S interface and provides the bit clock. See also CLAB.
SBDA	SBC ↔ ERCO	sub-band data	Sub-band I²S interface line for serial data transfer between SBC and ERCO.
SBDIR	SBC ← DDSP	sub-band direction	Control line from DDSP to SBC to indicate the direction of the data flow between ERCO and SBC on SBDA line.
SBEF	SBC ← ERCO	sub band error flag	I²S error flag to give the error status of bytes being transferred during data playback to the SBC (see also EFAB).
SBMCLK	SBC → ERCO	sub-band master clock	Master clock (6.144 MHz) for ERCO (see also IOSC)
SBWS	SBC ↔ ERCO SBC ↔ DDSP	sub-band word select	The SBWS signal indicates the channel of the sample (either left or right) and is equal to the sampling frequency Fs. On the ERCO and DDSP devices the signal is called WS (see also WS).
SCK/BCK	DAI ↔ I²S	shift / bit clock	Bidirectional shift/bit clock for audio data connected to I²S-bus.
SCKI	DAC ← dig filter	serial clock input	Bit clock input for the serial input interface. Clock is supplied by the digital filter via the BCKO pin (see also BCKO).
SCL	SBC → SBF SBC → ADAS SBC ↔ DAI SBC → dig filter DAI → I²S adaption of ADC	serial clock	Bit clock for the I²S-interface. Clock frequency is 64x sampling frequency. See also BCKI, SCK/BCK and SCLK.
SD/SDI	DAI ← I²S-bus	serial data input	Bidirectional serial data line for the I²S-bus (see also SDA).
SD0	DAI → n.c.	serial data output	Serial data output for digital audio data bus.

Signal name	*Signal flow*	*Function*	*Explanation*
SDA	DAI ↔ SBF DAI → DAC (via digital filter) ADC → DAI	serial data	Serial data line of I²S-bus. The data line carries digital audio (broad band data) according I²S-format. Two samples (left- and right channel) are transferred during one SWS-period. The ADC outputs broad band data via its SDATA pin, the DAI receives data on its ADSDI pin and outputs data on SDI, the digital filter receives data on DIN and the DAC on SDI1 and SDI2.
SDATA	ADC → DAI	serial data	Serial data output of AD convertor which is transferred to DAI data input ADSDI (see also ADSDI).
SDI1 SDI2	DAC ← dig filter	serial data input	Serial data inputs (broad band digital audio data) for conversion to analog left and right audio. The data comes from the DOL and DOR outputs of the digital filter. See also DOL, DOR and SDA.
SELERFI	DDSP → ERCO	select ERCO/FIFO	Control line output of DDSP to determine the nature of data transferred to ERCO. If SELERFI=1 the transfers are to and from the error correction section. If SELERFI=0 transfers are to and from I²S-interface section of the ERCO device.
SETDAT	ERCO ← DDSP	settings data register	Data settings line for the settings register of the ERCO. SETDAT determines the operational mode of the ERCO device. See also SETERCO.
SETERCO	DDSP → ERCO	set ERCO	Output of DDSP to transfer control settings of the ERCO (see also SETDAT). These settings determine whether ERCO should encode or decode and it also designates the direction of data transfer for the I²S-interface.
SETINH	ERCO ← DDSP	settings inhibit	When SETINH is active the ERCO can receive settings data (via SETDAT line) from DDSP for its operation mode (see also INHERCO, SETDAT and SETERCO).

Signal name	*Signal flow*	*Function*	*Explanation*
SETPIN1 SETPIN2	DDSP → n.c.		Microcontroller port expander outputs.
SETSY	DAI ← SBC	settings sync	DAI latches new settings in internal register when SETSY is active. SETSY is sent by SBC which takes care for external clock source synchronization (see also SYNCDAI).
SPEED	DDSP → servo capstan motor	speed control	Pulse width modulated control output of DDSP for phase regulating the speed of the capstan in the tape deck (tape speed).
STMPB	DDSP → ERCO	start error correction program	STMPB initiates the execution of the error correction program, to begin processing a new code word and causes activation of the new settings for both I²S-interface and the ERCO.
STRTSEG	DDSP → µC	start segment	STARTSEG indicates the start of a new segment. The STRTSEG output from the DDSP is used as a timing reference for transfer of SYSINFO and AUX information between the microcontroller and the DDSP.
SWS	SBC → ADAS SBC → SBF SBC ↔ DAI SBC → ADC SBC → dig filter	word select	Word select line (at sampling frequency) for I²S interface. SBC acts as the master with the exception of the mode digital recording. In that case DAI is the master. SWS is connected to WS/LRCK of the DAI, to LR of the ADC and to LRCI of digital filter (see also WS/LRCL, LR and LRCI).
SYNCDAI	SBC → DAI	synchronize DAI	With SYNCDAY (identical with SETSY) the settings for the DAI are latched. These settings are transferred via the I²C-bus.

Signal name	*Signal flow*	*Function*	*Explanation*
TAUX TCH0 TCH1 TCH2 TCH3 TCH4 TCH5 TCH6 TCH7	DDSP ← DEQ	channel input	Parallel input lines of DDSP receiving sliced (digital) information of DEQ (see also AUX and CH0..CH7).
TX	DAI → digital out	transmit data	Digital data output of DAI according IEC format.
UNLOCK	DAI → VCO	unlock VCO	UNLOCK indicates that VCO frequency is locked/unlocked to received data. As long as VCO is not locked audio is muted (see also MUTE).
URDA	DDSP → SBC	unreliable data	Only during playback URDA indicates that, regardless of all other flag information, all main data, system information or AUX data is unusable. URDA occurs during a mode change from data recording to playback or if the DDSP must resynchronize with the tape signals.
USYNCI	DAI → μC	microcontroller sync input	Indicates to the microcontroller the start of a new data frame when in transmitting mode.
USYNCO	DAI ← μC	microcontroller sync output	Indicates start of a new data frame when in receiving mode.
VAL	DEQ → test pin	validation data	Validation signal output for data bits. To test equalization performance it is possible to output the equalized channels. The DEQ has for this purpose two digital outputs present: DIGEYE and VAL (see also DIGEYE).
VIN	DEQ ← read amp	voltage input	DEQ inputs via VIN time multiplexed data from read amplifier. See also RDMUX.

Signal name	*Signal flow*	*Function*	*Explanation*
VIRGIN	DEQ → μC	virgin detection	Control output of DEQ to inform the microcontroller a blank tape is inserted.
WCKO	dig filter → DAC	word clock output	Control line for DAC to indicate whether data for the left channel is transmitted or data for the right channel. Has the same function as the word select signal of the I²S-interface. See also SWS, WS and WSI.
WCLK	write amp ← DDSP	write clock	Clock signal for the write amplifier as timing reference (f = 3.072MHz). See also WCLOCK.
WCLOCK	DDSP → write amp	write clock	Write clock for write amplifier coming from DDSP. See also WCLK.
WDATA	DDSP → write amp	write data	Serial data signal of the 8 main channels and AUX channel, directed to the write amplifier.
WEN	DDSP → DRAM	write enable	Write enable of the DRAM.
WS	ERCO ↔ SBC DDSP ↔ SBC	word select	I²S-interface word selection I/O line. Is connected to SBWS pin of SBC. See also SBWS.
WS/LRCK	DAI ↔ I²S	word select/ left-right clock	Word selection for digital audio data on I²S-interface. In mode digital record the DAI is master of the I²S-bus. See also SWS.
WSI	DAC ← dig filter	word select input	See WCKO.
XIN	DAC ← 256Fs	crystal frequency input	Clock input for the DAC, set on 256 x sampling frequency. See also 256Fs, CKI and MSTCK.
XSEL	DAC ← ground	crystal selection	Control input to select between two crystal frequencies. XSEL=1; CLK=384 Fs XSEL=0; CLK=256 Fs

VOLTAGE CHARTS

(GB)
Measuring condition
STOP condition (no cassette tape)
INPUT terminal : (no condition)
DOLBYSW (switch) : OFF
TIMER SW (switch) : OFF

(NL)
Meetkonditie
STOP–konditie (geen cassettetape)
Ingangsaansluitpunt (INPUT) : geen aansluiting
DOLBY–SW (schakelaar) : uit (OFF)
TIMER–SW (schakelaar) : uit (OFF)

(F)
Etat des mesures
Etat d'arrêt (sans cassette)
Borne d'entrée (sans connexion)
Commutateur DOLY : désactivé
Commutateur de la minuterie : désactivé

(D)
Meßbedingungen
STOP Zustand (keine Cassette)
INPUT (Eingang) : Verbindung keine
DOLBY SW (Schalter) : AUS
TIMER SW (Zeitschalter) : AUS

(I)
Misurazione delle condizioni
Condizione di STOP (niente nastro a cassette)
Terminale INPUT : niente collegamenti
Interruttore DOLBY : OFF
Interruttore TIMER : OFF

MAIN PCB (PG03)

Q031

Pin No.	1	2	3	4	5	6	7	8
Voltage	–	0V	0V	0V				5.0V

Q601

Pin No.	1	2	3	4	5	6	7	8	9	10	11	12	13	14	15
Voltage	0V	0V	0V	0V	–7.1V	0V	0V	0V	0V	0V	–6.7V	–6.7V	0V	–5.8V	–7.1V
Pin No.	16	17	18	19	20	21	22	23	24	25	26	27	28	29	30
Voltage	7.1V	0V	0V	–6.7V	–6.7V	0V	0V	0V	0V	0V	3.2V	0V	0V	0V	0V

Q602

Pin No.	1	2	3	4	5	6	7	8
Voltage	0V	0V	0V	–7.1V	0V	0V	0V	7.1V

Q811

Pin No.	1	2	3	4
Voltage	12.0V	5.0V	0V	3.3V

Q720

Pin No.	1	2	3	4	5	6	7	8
Voltage	0V	0V	0V	–12.0V	0V	0V	0V	11.9V

Q812

Pin No.	1	2	3
Voltage	12.0V	8.0V	0V

Q731

Pin No.	1	2	3	4	5	6	7	8
Voltage	0V	0V	0V	0V	0V	–	5.0V	0V

Q751

Pin No.	1	2	3	4	5	6	7	8
Voltage				–12.0V				11.9V

QA01

Pin No.	1	2	3	4	5	6	7	8	9	10	11	12	13	14
Voltage	2.4V	2.4V	2.4V	2.5V	2.4V	2.5V	0V	2.5V	2.5V	0V	0V	0V	0V	5.0V

QH02

Pin No.	1	2	3	4	5	6	7	8
Voltage	0V	0V	0V	–12.0V	0V	0V	0V	11.9V

QL01

Pin No.	1	2	3	4	5	6	7	8	9
Voltage	2.9V			2.0V	0V	2.0V			12.0V

QL02

Pin No.	1	2	3	4	5	6	7	8
Voltage	0V	0V	0V	–12.0V	0V	0V	0V	11.9V

QM21

Pin No.	1	2	3	4	5	6	7	8	9	10
Voltage	0V			3.7V			13.1V			

QM51

Pin No.	1	2	3	4	5	6	7	8	9	10
Voltage	0V			7.4V	2.7V	2.7V	13.1V	13.1V		

QQ01

Pin No.	1	2	3	4	5	6	7	8	9
Voltage	2.0V		2.0V	–	–		–		10.2V

QQ51

Pin No.	1	2	3	4	5	6	7	8
Voltage	0V	0V	0V	–12.0V	0V	0V	0V	11.9V

QU01

Pin No.	1	2	3	4	5	6	7	8	9	10
Voltage		5.0V	5.0V	5.0V					4.8V	
Pin No.	11	12	13	14	15	16	17	18	19	20
Voltage		0.10V			4.8V		0V	–	–	–
Pin No.	21	22	23	24	25	26	27	28	29	30
Voltage	4.9V	4.9V	4.9V	4.9V	–	4.9V			5.0V	
Pin No.	31	32	33	34	35	36	37	38	39	40
Voltage	4.9V	0V	0V			–	–	–	–	–
Pin No.	41	42	43	44	45	46	47	48	49	50
Voltage	4.9V	4.9V		4.9V	4.8V		4.8V			4.8V
Pin No.	51	52	53	54	55	56	57	58	59	60
Voltage		4.8V		0V	0V	–	0V			5.0V
Pin No.	61	62	63	64	65	66	67	68	69	70
Voltage			3.6V	3.0V	2.8V	5.0V	5.0V		5.0V	5.0V
Pin No.	71	72	73	74	75	76	77	78	79	80
Voltage		4.6V		5.0V	5.0V	5.0V	5.0V	5.0V	5.0V	5.0V

QU21

Pin No.	1	2	3	4	5	6	7	8	9	10	11	12	13	14
Voltage	4.8V	0V	0.8V	4.9V	4.9V	0.8V	0V							5.0V

QU81

Pin No.	1	2	3	4	5	6	7	8
Voltage					0V	–	–	5.0V

Q611

Pin No.	E	C	B
Voltage	4.9V	0V	4.9V

Q612

Pin No.	E	C	B
Voltage	−7.1V	3.2V	−7.1V

Q613

Pin No.	E	C	B
Voltage	3.2V	3.2V	0V

Q641

Pin No.	E	C	B
Voltage	0V	0V	

Q642

Pin No.	E	C	B
Voltage	0V	0V	

Q671

Pin No.	E	C	B
Voltage	0V	0V	2.0V

Q672

Pin No.	E	C	B
Voltage	0V	0V	2.0V

Q701

Pin No.	E	C	B
Voltage	0V	12.0V	0V

Q702

Pin No.	E	C	B
Voltage	0V	0V	3.0V

Q761

Pin No.	E	C	B
Voltage	0V	0V	

Q762

Pin No.	E	C	B
Voltage	0V	0V	

Q763

Pin No.	E	C	B
Voltage	0V	0V	

Q764

Pin No.	E	C	B
Voltage	0V	0V	

Q765

Pin No.	E	C	B
Voltage	0V	0V	

Q766

Pin No.	E	C	B
Voltage	0V	0V	

Q767

Pin No.	E	C	B
Voltage	0V	0V	

Q768

Pin No.	E	C	B
Voltage	0V	0V	

Q806

Pin No.	E	C	B
Voltage	7.0V	11.8V	7.6V

Q807

Pin No.	E	C	B
Voltage	−7.1V	−11.9V	−7.6V

Q809

Pin No.	E	C	B
Voltage	0V	4.3V	0V

Q810

Pin No.	E	C	B
Voltage	0V	0V	7.9V

Q843

Pin No.	E	C	B
Voltage	0V	3.4V	0V

QA02

Pin No.	E	C	B
Voltage	0V	2.4V	0V

QA03

Pin No.	E	C	B
Voltage	2.9V	0V	3.6V

QA04

Pin No.	E	C	B
Voltage	0V	1.7V	0.7V

QH05

Pin No.	E	C	B
Voltage	0V	0V	

QH06

Pin No.	E	C	B
Voltage	0V	0V	

QH07

Pin No.	E	C	B
Voltage	0V	0V	

QH08

Pin No.	E	C	B
Voltage	0V	0V	

QM01

Pin No.	E	C	B
Voltage	0V	0V	0V

QM02

Pin No.	E	C	B
Voltage	13.1V	0V	0V

QM03

Pin No.	E	C	B
Voltage	0V	12.6V	0V

QM04

Pin No.	E	C	B
Voltage	0V	0V	4.9V

QM22

Pin No.	E	C	B
Voltage	0V	0V	5V

QM81

Pin No.	E	C	B
Voltage	0V	0V	4.2V

QM82

Pin No.	E	C	B
Voltage	0V	0V	4.6V

QM83

Pin No.	E	C	B
Voltage	0V		

QM84

Pin No.	E	C	B
Voltage	0V	13.1V	0V

QM85

Pin No.	E	C	B
Voltage	0V	13.1V	0V

QM86

Pin No.	E	C	B
Voltage	0V	13.1V	0V

QM87

Pin No.	E	C	B
Voltage	0V	13.1V	13.1V

QQ03

Pin No.	E	C	B
Voltage	0V	0V	2.9V

QQ04

Pin No.	E	C	B
Voltage	0V	0V	3.2V

QQ05

Pin No.	E	C	B
Voltage	0V	0.6V	0V

QQ06

Pin No.	E	C	B
Voltage	0V	0V	2.9V

QQ21

Pin No.	E	C	B
Voltage	0.3V	3.9V	0.9V

QQ52

Pin No.	E	C	B
Voltage	0V	0V	2.9V

QR01

Pin No.	E	C	B
Voltage	5.0V	5.0V	0V

QR02

Pin No.	E	C	B
Voltage	0V	4.8V	0V

QR51

Pin No.	E	C	B
Voltage	0V	0V	3.2V

QR52

Pin No.	E	C	B
Voltage	0V	0V	3.1V

QU02

Pin No.	E	C	B
Voltage	0V	0V	3.0V

QU03

Pin No.	E	C	B
Voltage	5.0V	−12.0V	5.0V

QU04

Pin No.	E	C	B
Voltage	5.0V	−12.0V	5.0V

QU11

Pin No.	E	C	B
Voltage	3.6V	3.5V	0V

QU12

Pin No.	E	C	B
Voltage	3.9V	3.5V	4.2V

QU13

Pin No.	E	C	B
Voltage	0V	0V	2.9V

QU14

Pin No.	E	C	B
Voltage	0V	0V	2.9V

QU16

Pin No.	E	C	B
Voltage	3.9V	3.5V	4.2V

QU17

Pin No.	E	C	B
Voltage	2.9V	5.0V	3.5V

QU18

Pin No.	E	C	B
Voltage	3.6V	3.5V	0V

QU19

Pin No.	E	C	B
Voltage	4.2V	5.0V	5.0V

QU22

Pin No.	E	C	B
Voltage	0V	5.0V	0V

QU32

Pin No.	E	C	B
Voltage			

QU33

Pin No.	E	C	B
Voltage	4.9V	0V	4.9V

QU52

Pin No.	E	C	B
Voltage	5.5V	0V	5.5V

QU53

Pin No.	E	C	B
Voltage	0V	5.0V	0V

QU54

Pin No.	E	C	B
Voltage			

QU55

Pin No.	E	C	B
Voltage	0V		

QU56

Pin No.	E	C	B
Voltage	0V		

QU57

Pin No.	E	C	B
Voltage	0V	5.0V	0V

QU61

Pin No.	E	C	B
Voltage	−25.1V	−25.1V	4.3V

QU62

Pin No.	E	C	B
Voltage	5.0V	4.9V	0V

QU63

Pin No.	E	C	B
Voltage	−31.0V	−30.4V	−29.7V

QU64

Pin No.	E	C	B
Voltage	0V	5.0V	0V

QU65

Pin No.	E	C	B
Voltage	5.0V	0V	5.0V

DC POWER SUPPLY (PS03)

Q871

Pin No.	1	2	3	4
Voltage	*17.1V*	*12.0V*	*0V*	*4.2V*

Q872

Pin No.	1	2	3
Voltage	*–19.0V*	*–12.1V*	*0V*

Q873

Pin No.	1	2	3	4
Voltage	*9.8V*	*5.0V*	*0V*	*2.8V*

Q874

Pin No.	1	2	3	4
Voltage	*9.6V*	*5.0V*	*0V*	*5.0V*

DIGITAL PCB (PZ03)

Q401

Pin No.	1	2	3	4	5	6	7	8	9	10	11
Voltage	*4.9V*	–	–	–	–	–	–	–	–	*0V*	–
Pin No.	12	13	14	15	16	17	18	19	20	21	22
Voltage	–	*0V*	*0V*	–	–	*0V*	–	*0.2V*	*0V*	–	–
Pin No.	23	24	25	26	27	28	29	30	31	32	33
Voltage	*4.9V*	*2.5V*	–	*0V*	–	–	–	*0V*	*2.5V*	*2.5V*	–
Pin No.	34	35	36	37	38	39	40	41	42	43	44
Voltage	–	*0V*	–	*0V*	–	*0V*	–	–	–	*0V*	–

Q402

Pin No.	1	2	3	4	5	6	7	8	9	10	11
Voltage	*4.9V*	–	–	–	–	–	–	–	–	*0V*	–
Pin No.	12	13	14	15	16	17	18	19	20	21	22
Voltage	–	*4.9V*	*0V*	–	–	*0V*	–	–	*0V*	–	–
Pin No.	23	24	25	26	27	28	29	30	31	32	33
Voltage	*4.9V*	*2.5V*	–	*0V*	–	–	–	*0V*	*2.5V*	*2.5V*	–
Pin No.	34	35	36	37	38	39	40	41	42	43	44
Voltage	–	*0V*	–	*0V*	–	*0V*	–	–	–	*0V*	–

Q403

Pin No.	1	2	3	4	5	6	7	8	9	10	11
Voltage	*4.1V*	*4.9V*	*0V*	*4.9V*	*4.9V*	*0V*	*0V*	*4.9V*	*4.9V*	*0V*	–
Pin No.	12	13	14	15	16	17	18	19	20	21	22
Voltage	–	*4.9V*	–	–	*4.9V*	*0V*	*0V*	*0V*	*0V*	*0V*	*0V*
Pin No.	23	24	25	26	27	28	29	30	31	32	33
Voltage	–	–	*0V*	*2.5V*	*2.5V*	*0V*	*0V*	*0V*	*0V*	–	*2.5V*
Pin No.	34	35	36	37	38	39	40	41	42	43	44
Voltage	*0.2V*	*0V*	*2.5V*	*2.5V*	*2.5V*	*4.9V*	*4.9V*	*2.4V*	*2.4V*	*0V*	*0V*

Q404

Pin No.	1	2	3	4	5	6	7	8	9	10
Voltage	4.9V	0V	4.9V	–	–	2.5V	2.0V	0V	2.5V	0V
Pin No.	11	12	13	14	15	16	17	18	19	20
Voltage	–	–	4.9V	0V	–	–	–	0V	3.1V	0V
Pin No.	21	22	23	24	25	26	27	28	29	30
Voltage	2.2V	4.9V	0V	2.1V	2.6V	2.3V	2.5V	2.7V	2.7V	2.9V
Pin No.	31	32	33	34	35	36	37	38	39	40
Voltage	0.9V	4.8V	2.7V	2.7V	3.1V	0V	0V	0V	4.9V	2.5V
Pin No.	41	42	43	44	45	46	47	48	49	50
Voltage	2.5V	0V	4.9V	4.6V	4.8V	4.8V	0.5V	3.9V	3.8V	3.5V
Pin No.	51	52	53	54	55	56	57	58	59	60
Voltage	3.1V	3.4V	3.2V	3.2V	3.3V	2.9V	3.1V	2.4V	4.9V	0V
Pin No.	61	62	63	64	65	66	67	68	69	70
Voltage	0V	0V	4.9V	0V	0V	1.5V	4.8V	0V	4.8V	4.9V
Pin No.	71	72	73	74	75	76	77	78	79	80
Voltage	0V	4.6V	2.9V	2.3V	3.8V	3.5V	4.5V	3.9V	4.1V	3.9V

Q405

Pin No.	1	2	3	4	5	6	7	8	9	10	11
Voltage	–	–	0V	0V	–	–	2.4V	–	2.4V	–	0V
Pin No.	12	13	14	15	16	17	18	19	20	21	22
Voltage	–	4.9V	2.4V	2.4V	0V	–	–	0V	0V	0V	0V
Pin No.	23	24	25	26	27	28	29	30	31	32	33
Voltage	0V	0V	0V	0V	2.4V	2.4V	0V	4.9V	4.9V	4.9V	4.9V
Pin No.	34	35	36	37	38	39	40	41	42	43	44
Voltage	2.4V	2.4V	0V	0V	0V	–	–	4.9V	0V	–	–

Q406

Pin No.	17	18	1	2	
Voltage	1.8V	0V	3.1V	2.8V	
Pin No.	3	4	5	6	7
Voltage	3.0V	4.6V	0.9V	2.9V	2.6V
Pin No.	8	9	10	11	
Voltage	2.5V	4.9V	2.9V	2.3V	
Pin No.	12	13	14	15	16
Voltage	2.6V	2.1V	2.2V	0V	3.0V

Q409

Pin No.	1	2	3	4	5	6	7	8
Voltage	0V	4.8V	4.9V	0V	4.9V	–	4.9V	0V
Pin No.	9	10	11	12	13	14	15	16
Voltage	–	–	4.9V	0V	4.9V	–	0V	4.9V

Q410

Pin No.	1	2	3	4	5	6	7	8	9	10	11
Voltage	1.0V	4.8V	0V	0V	0V	0V	4.9V	4.9V	0V	0V	0V
Pin No.	12	13	14	15	16	17	18	19	20	21	22
Voltage	–	–	4.9V	4.9V	4.9V	0V	0V	0V	4.9V	4.9V	0V
Pin No.	23	24	25	26	27	28	29	30	31	32	33
Voltage	0V	4.9V	0V	2.5V	0V	0V	0V	0V	2.5V	2.5V	0V
Pin No.	34	35	36	37	38	39	40	41	42	43	44
Voltage	0V	0.2V	0V	4.9V	4.9V	2.5V	4.9V	–	–	–	0V

Q412

Pin No.	1	2	3	4	5	6	7	8	9	10	11	12	13	14
Voltage	0V	4.8V	4.9V	0V	0V	0V	0V	–	0V	0V	3.1V	0V	3.1V	4.9V

Q423

Pin No.	1	2	3	4	5	6	7	8	9	10	11
Voltage	1.9V	0.5V	2.4V	0V	2.5V	1.4V	3.5V	0V	1.3V	0V	4.7V
Pin No.	12	13	14	15	16	17	18	19	20	21	22
Voltage	4.9V	0V	0V	3.4V	2.3V	0V	–	–	–	–	4.4V
Pin No.	23	24	25	26	27	28	29	30	31	32	33
Voltage	3.5V	3.2V	3.7V	2.6V	3.0V	4.1V	4.1V	4.6V	4.8V	0V	0V
Pin No.	34	35	36	37	38	39	40	41	42	43	44
Voltage	4.8V	4.9V	0V	0V	0V	0V	0V	0V	0V	2.5V	0.5V

Q441

Pin No.	1	2	3	4	5	6	7	8	9	10	11
Voltage	2.4V	4.9V	2.1V	1.9V	1.7V	0V	4.9V	4.9V	4.9V	2.3V	–
Pin No.	12	13	14	15	16	17	18	19	20	21	22
Voltage	0V	2.5V	2.5V	–	2.0V	0V	0V	0V	–	–	4.9V
Pin No.	23	24	25	26	27	28	29	30	31	32	33
Voltage	4.9V	4.9V	0V	2.5V	0V	0V	–	4.8V	0V	0V	0V
Pin No.	34	35	36	37	38	39	40	41	42	43	44
Voltage	4.9V	4.7V	0V	4.9V	4.9V	0V	0V	0V	0V	0V	3.2V

Q442

Pin No.	1	2	3	4	5	6	7	8	9	10	11	12	13	14
Voltage	0V	–	0V	–	0V	–	0V	2.6V	2.5V	2.5V	2.5V	0V	4.9V	4.9V

Q443

Pin No.	1	2	3	4	5	6	7	8
Voltage	–	4.5V	3.3V	0V	0V	0V	4.9V	–

Q444

Pin No.	1	2	3	4	5	6	7	8
Voltage	–	–	0V	2.4V	0V	0.4V	0.4V	0V
Pin No.	9	10	11	12	13	14	15	16
Voltage	1.0V	–	1.0V	4.2V	–	0V	–	4.9V

Q411

Pin No.	E	C	B
Voltage	4.9V	4.9V	0V

Q421

Pin No.	E	C	B
Voltage	3.5V	4.7V	4.2V

Q422

Pin No.	E	C	B
Voltage	1.4V	0V	0.7V

READ/WRITE (PW03)

Q101

Pin No.	1	2	3	4	5	6	7	8	9	10	11
Voltage	2.7V	2.1V	2.1V	4.9V	0.5V	2.4V	2.9V	0V	0.6V	1.8V	0.6V
Pin No.	12	13	14	15	16	17	18	19	20	21	22
Voltage	0.6V	0.6V	0.6V	0.6V	0V	0.6V	0.6V	0.6V	0.6V	4.9V	0.7V
Pin No.	23	24	25	26	27	28	29	30	31	32	33
Voltage	2.1V	2.6V	2.4V	0.7V	2.7V	0V	0V	2.7V	0.7V	2.4V	2.6V
Pin No.	34	35	36	37	38	39	40	41	42	43	44
Voltage	2.1V	3.2V	4.9V	2.0V	–	–	–	–	–	–	2.6V

Q151

Pin No.	1	2	3	4	5	6	7	8	9	10	11	12
Voltage	2.5V	1.9V	0V	5.0V	0V	0V		5.0V		5.0V	0V	0V
Pin No.	13	14	15	16	17	18	19	20	21	22	23	24
Voltage	0V	4.1V	4.5V	4.1V	4.5V	4.1V	5.0V	4.1V	0V	4.1V	4.1V	4.1V

Q181

Pin No.	1	2	3	4	5	6	7	8
Voltage	3.7V	0V	0V	0V	1.9V	0V	0V	0V
Pin No.	9	10	11	12	13	14	15	16
Voltage	4.8V	3.8V	0.3V	3.6V	5.0V	3.7V	3.1V	5.0V

Q182

Pin No.	1	2	3	4	5	6	7	8
Voltage	5.0V	2.0V	–	1.9V	3.1V	1.4V	3.6V	0V
Pin No.	9	10	11	12	13	14	15	16
Voltage	2.5V	0V	5.0V	0V	0.3V	–	0.3V	5.0V

Q183

Pin No.	1	2	3	4	5	6	7	8	9	10	11	12	13	14
Voltage	1.4V	0.3V	4.8V	0V	0V	–	0V	3.9V	2.1V	1.9V	2.4V	2.4V	5.0V	5.0V

Q184

Pin No.	1	2	3	4	5	6	7	8
Voltage	5.0V	2.5V	5.0V	0V	0V	5.0V	5.0V	0V
Pin No.	9	10	11	12	13	14	15	16
Voltage	3.8V	5.0V	–	–	–	–	0.3V	5.0V

Q185

Pin No.	1	2	3	4	5	6	7	8	9	10	11	12	13	14
Voltage	1.4V	3.6V	0V	4.4V	0.3V	0.3V	0V	1.4V	4.4V	0.5V	4.4V	5.0V	0V	5.0V

Q102

Pin No.	E	C	B
Voltage	6.6V	7.9V	7.2V

Q103

Pin No.	E	C	B
Voltage	5.9V	7.9V	6.6V

Q104

Pin No.	E	C	B
Voltage	5.9V	7.9V	6.6V

Q105

Pin No.	E	C	B
Voltage	4.9V	2.8V	4.3V

Q106

Pin No.	E	C	B
Voltage	1.4V	4.3V	2.0V

Q153

Pin No.	E	C	B
Voltage	0V	0.6V	0V

Q180

Pin No.	E	C	B
Voltage	0V	0V	0V

Q190

Pin No.	E	C	B
Voltage	0V	3.0V	1.3V

AD/DA PCB (PA03)

Q201

Pin No.	1	2	3	4	5	6	7	8	9	10	11	12	13	14
Voltage	0V	0V	0V	4.9V	-5.0V	0V		–		0V	0V	0V	0V	2.4V
Pin No.	15	16	17	18	19	20	21	22	23	24	25	26	27	28
Voltage	2.4V	1.8V	4.8V	4.8V	0V	2.3V	–	2.3V	2.4V	0V	4.8V			-3.6V

Q202

Pin No.	1	2	3	4	5	6	7	8	9	10
Voltage	0V	2.4V	2.4V	2.4V	2.4V	2.4V	2.4V	2.4V	2.4V	0V
Pin No.	11	12	13	14	15	16	17	18	19	20
Voltage	2.4V	2.4V	2.4V	2.4V	2.4V	2.4V	2.4V	2.5V	2.4V	4.9V

Q203

Pin No.	1	2	3	4	5	6	7	8	9	10	11	12	13	14
Voltage	2.4V	2.4V	3.6V	3.6V	2.4V	2.4V	0V	2.4V	2.4V	2.4	–	0V	0V	4.9V

Q204

Pin No.	IN	OUT	GND
Voltage	9.0V	5.0V	0V

Q205

Pin No.	IN	OUT	GND
Voltage	-8.9V	-5.0V	0V

Q221

Pin No.	1	2	3	4	5	6	7	8
Voltage	0V	0V	0V	-11.5V	0V	0V	0V	11.4V

Q222

Pin No.	1	2	3	4	5	6	7	8
Voltage	0V	0V	0V	-11.5V	0V	0V	0V	11.4V

Q301

Pin No.	1	2	3	4	5	6	7	8	9	10	11
Voltage	0V	–	–	0V	0V	0V	0V	0V	3.9V	0.7V	–
Pin No.	12	13	14	15	16	17	18	19	20	21	22
Voltage	4.8V	0V	2.4V	–	–	0V	4.8V	2.4V	2.4V	0V	2.4V
Pin No.	23	24	25	26	27	28	29	30	31	32	33
Voltage	2.3V	2.4V	0V	2.4V	4.9V	0V	4.9V	2.4V	2.4V	0V	2.4V
Pin No.	34	35	36	37	38	39	40	41	42	43	44
Voltage	2.3V	2.4V	0V	2.4V	2.4V	4.8V	–	–	–	–	–

Q302

Pin No.	1	2	3	4	5	6	7	8	9	10	11
Voltage	0V	2.4V	0V	–	0V	–	–	–	0V	0V	4.9V
Pin No.	12	13	14	15	16	17	18	19	20	21	22
Voltage	0.8V	0V	0V	3.9V	4.9V	–	–	–	2.4V	2.5V	0V

Q303

Pin No.	1	2	3	4	5	6	7	8
Voltage				−11.8V	0V			11.7V

Q304

Pin No.	1	2	3	4	5	6	7	8
Voltage				−11.8V	0V			11.7V

Q305

Pin No.	1	2	3	4	5	6	7	8
Voltage	0.1V			−11.8V				11.7V

Q306

Pin No.	1	2	3	4	5	6	7	8
Voltage	0.1V			−11.8V				11.7V

Q206

Pin No.	E	C	B
Voltage	4.9V	0V	

Q307

Pin No.	D	G	S
Voltage			0V

Q308

Pin No.	D	G	S
Voltage			0V

Q309

Pin No.	E	C	B
Voltage	0V	−11.9V	1.2V

Q311

Pin No.	D	G	S
Voltage	0.1V		0.1V

Q312

Pin No.	D	G	S
Voltage	0.1V		0.1V

Q313

Pin No.	D	G	S
Voltage	0.1V		0.1V

Q314

Pin No.	D	G	S
Voltage	0.1V		0.1V

TRAY WIRE CONNECTION SERVO PCB (PM03)

Q001

Pin No.	1	2	3	4	5	6	7	8	9	10	11	12	13	14
Voltage	2.9V	2.5V	2.5V	13.4V	2.5V	2.5V	2.4V	1.8V	1.3V	1.3V	0V	2.5V	2.5V	2.5V

QS01

Pin No.	1	2	3	4	5	6	7	8	9	10	11	12	13	14
Voltage		13.3V	13.3V	13.3V	12.2V	12.2V	0V	13.3V	13.3V	13.3V		0V	0V	13.4V

Q011

Pin No.	E	C	B
Voltage	1.3V	13.3V	1.8V

QS02

Pin No.	E	C	B
Voltage	0V		12.2V

QS03

Pin No.	E	C	B
Voltage	0V	12.2V	0.5V

FRONT PCB (PD03)

QD01

Pin No.	1	2	3	4	5	6	7	8	9	10	11	
Voltage	4.5V	5.0V	5.0V	5.0V	5.0V			0V	–	0V	0V	
Pin No.	12	13	14	15	16	17	18	19	20	21	22	23
Voltage	-27.5V	-29.3V	-30.9V	-31.0V	-28.8V	-31.0V	-31.0V	-29.2V	-7.8V	-27.1V	-20.5V	-21.2V
Pin No.	24	25	26	27	28	29	30	31	32	33	34	35
Voltage	0.1V	-10.6V	-10.6V	-10.5V	-24.4V	-11.7V	5.0V	-31.2V	-28.8V	-29.4V	-29.4V	-29.2V
Pin No.	36	37	38	39	40	41	42	43	44	45	46	47
Voltage	-28.7V	-29.3V	-28.8V	-29.4V	-29.4V	-29.4V	-29.4V	-29.4V	-29.4V	-29.4V	-29.4V	-29.5V
Pin No.	48	49	50	51	52	53	54	55	56	57	58	59
Voltage	5.0V	5.0V	5.0V	5.0V	5.0V	4.9V	4.9V	0V	0V	–	4.9V	0V
Pin No.	60	61	62	63	64	65	66	67	68	69	70	71
Voltage	5.0V	5.0V	0V	0V	0V	0V	0V	0V	0V	0V	0V	5.0V
Pin No.	72	73	74	75	76	77	78	79	80	81	82	83
Voltage	5.0V	5.0V	–	–	–	5.0V	0V	–	0V	5.0V	4.7V	5.0V
Pin No.	84	85	86	87	88	89	90	91	92	93	94	
Voltage	4.9V	0V	5.0V	0V	0V	4.5V	4.5V	4.5V	2.9V	0V	0V	

QD01

Pin No.	E	C	B
Voltage	5.0V	0V	5.0V

WIRING DIAGRAM

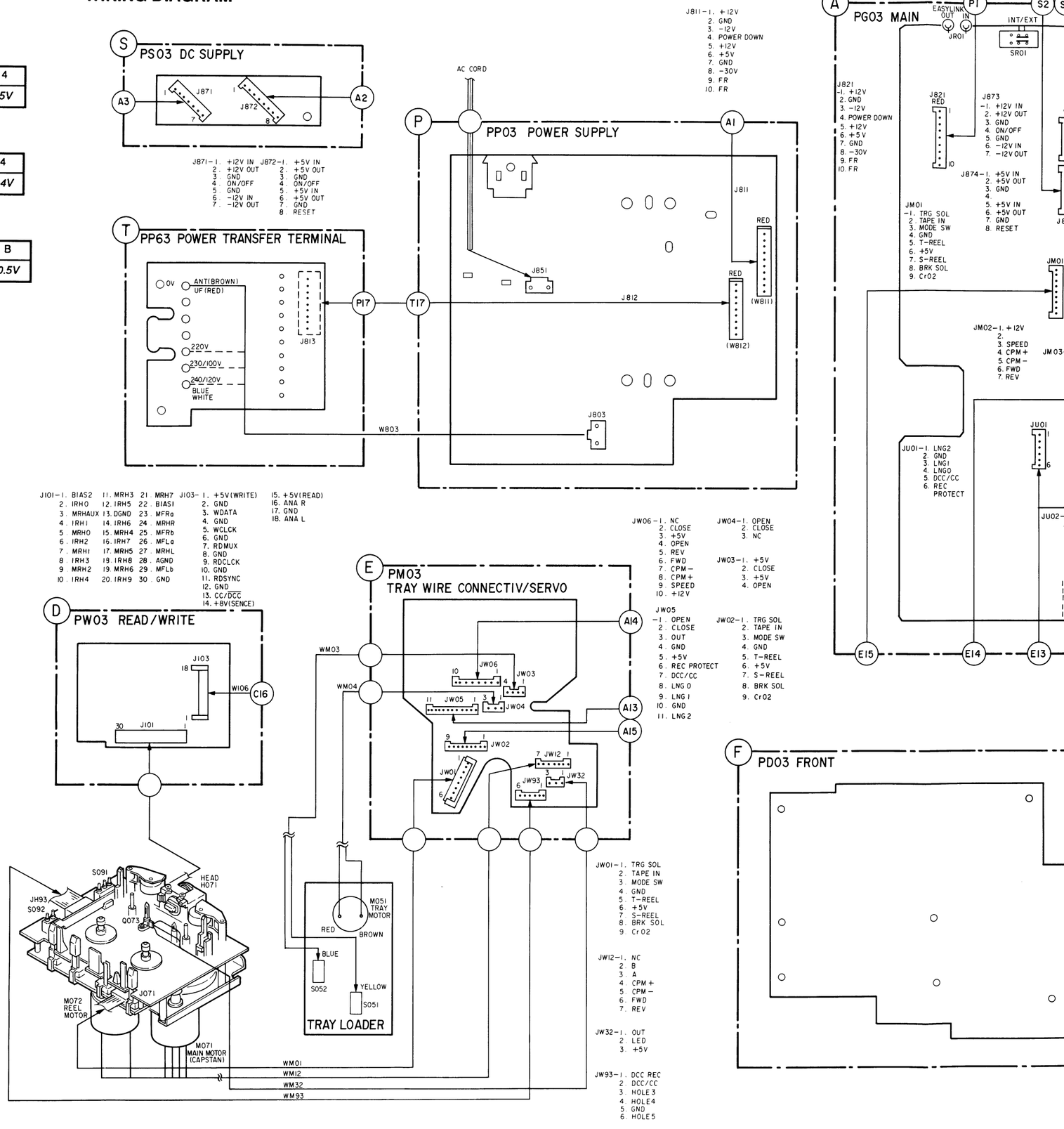

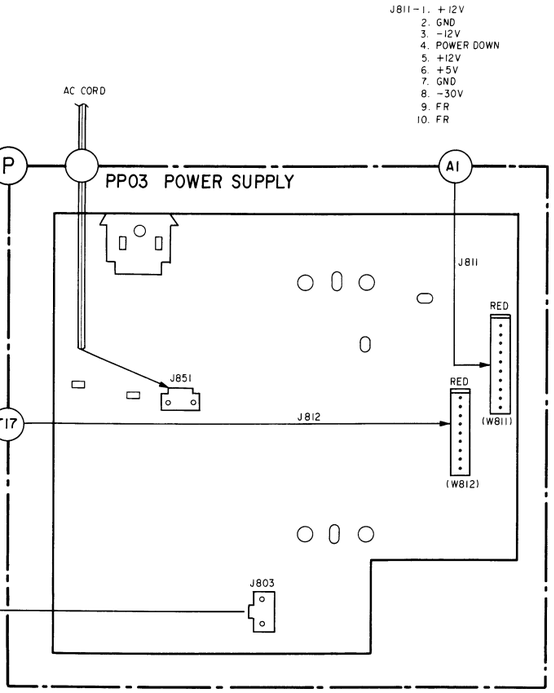

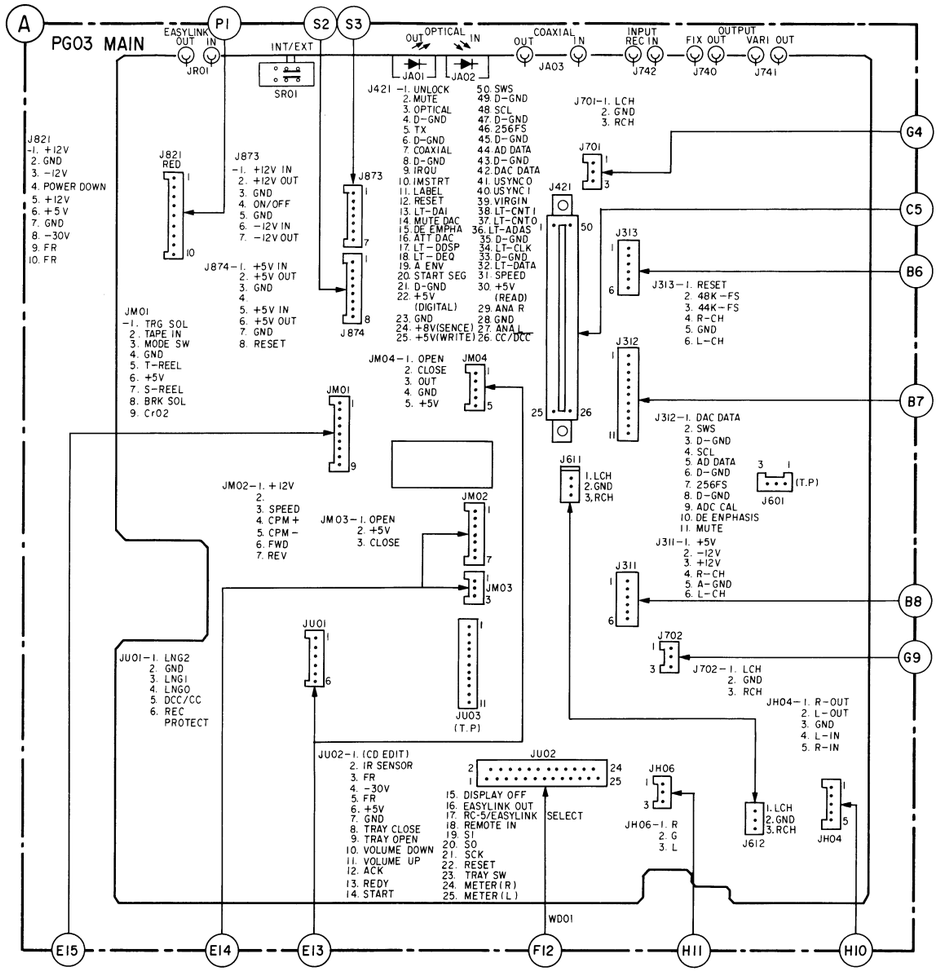

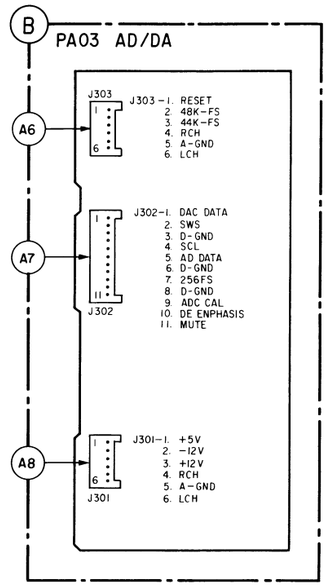

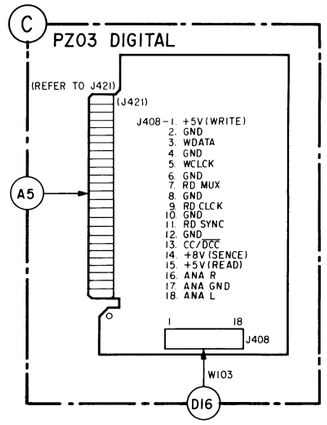

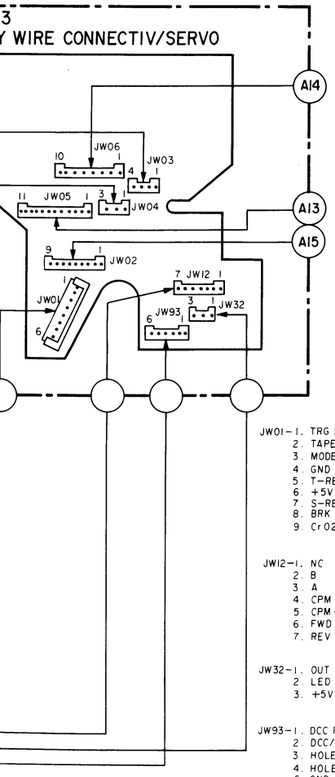

JW06 -1. NC 2. CLOSE 3. +5V 4. OPEN 5. REV 6. FWD 7. CPM- 8. CPM+ 9. SPEED 10. +12V

JW04 -1. OPEN 2. CLOSE 3. NC

JW03 -1. +5V 2. CLOSE 3. +5V 4. OPEN

JW05 -1. OPEN 2. CLOSE 3. OUT 4. GND 5. +5V 6. REC PROTECT 7. DCC/CC 8. LNG 0 9. LNG 1 10. GND 11. LNG2

JW02 -1. TRG SOL 2. TAPE IN 3. MODE SW 4. GND 5. T-REEL 6. +5V 7. S-REEL 8. BRK SOL 9. CrO2

JW01 -1. TRG SOL 2. TAPE IN 3. MODE SW 4. GND 5. T-REEL 6. +5V 7. S-REEL 8. BRK SOL 9. CrO2

JW12 -1. NC 2. B 3. A 4. CPM+ 5. CPM- 6. FWD 7. REV

JW32 -1. OUT 2. LED 3. +5V

JW93 -1. DCC REC 2. DCC/CC 3. HOLE 3 4. HOLE4 5. GND 6. HOLE5

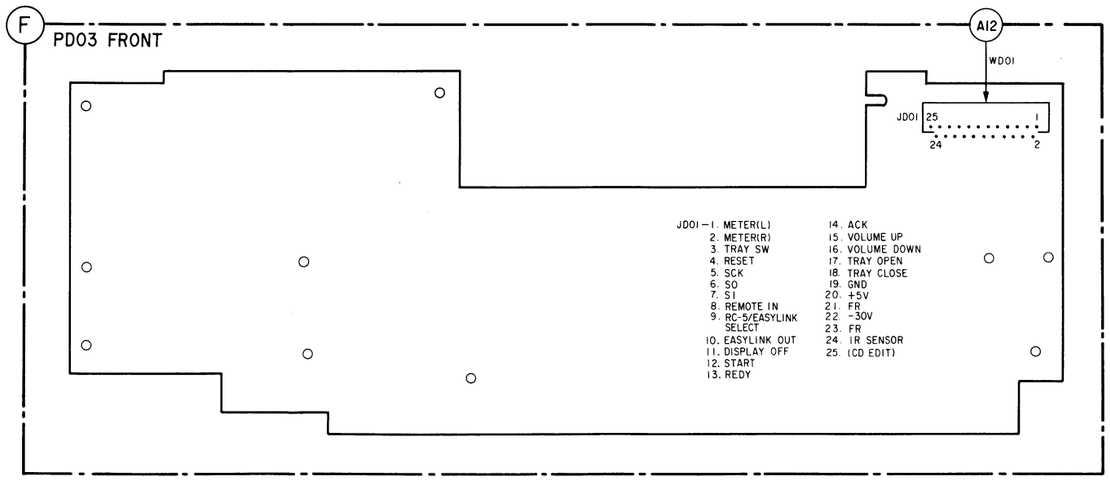

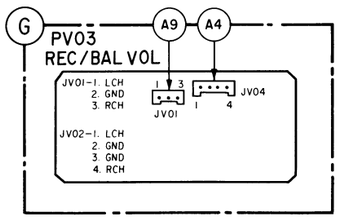

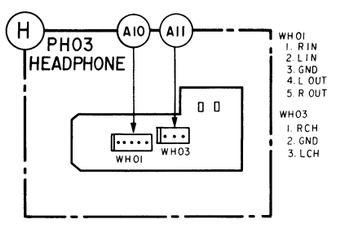

	Carbon film 0.125 W or 0.2 W	70°C	5%
	Carbon film 0.25 W or 0.33 W	70°C	5%
	Metal film 0.25 W or 0.33 W	70°C	5%
	Carbon film 0.5 W	70°C	5%
	Carbon film 0.67 W	70°C	5%
	Carbon film 1 W or 1.15 W	70°C	5%

(C) Chip component

	Ceramic plate Tuning ⩽ 120 pF NP.0	2%
	Others	−20/+80%
	Polyester flat foil	10%
	Metalized polyester flat film	10%
	Polyester flat foil small size (Mylar)	10%
	Polysterene film/foil	1%
	Tubular ceramic	
	Miniature single	
	Subminiature tantalum	± 20%

*a	= 2.5 V
b	= 3.15 V or 4 V
c	= 6.3 V
d	= 10 V
e	= 16 V
f	= 25 V
g	= 40 V
h	= 63 V
j	= 100 V
l	= 125 V
m	= 150 V
n	= 160 V
q	= 200 V
r	= 250 V
s	= 300 V
t	= 350 V
u	= 400 V
v	= 500 V
w	= 630 V
x	= 1000 V
A	= 1.6 V
B	= 6 V
C	= 12 V
D	= 15 V
E	= 20 V
F	= 35 V
G	= 50 V
H	= 75 V
I	= 80 V

SCHEMATIC DIAGRAM AND PARTS LOCATIONS

MAIN PCB (PG03)

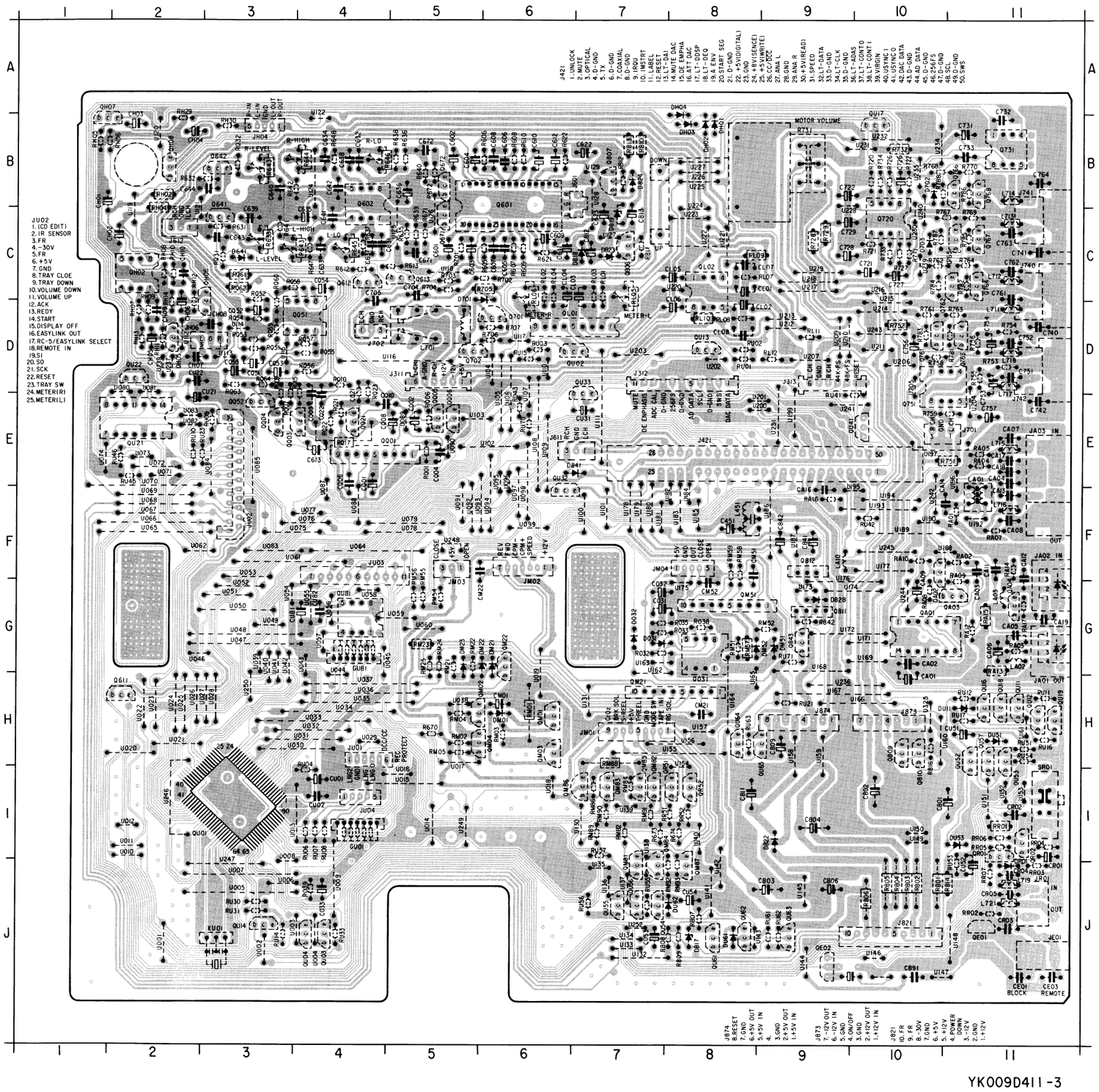

YK009D411-3

C031	G7	CH05	D2	J873	H10	QQ06	E5	R733	C10	RM55	G5				
C032	G7	CH06	D2	J874	H9	QQ21	E4	R734	B10	RM56	G5				
C033	J4	CH07	D2	JA01	G11	QQ51	D4	R752	D10	RM57	G8				
C451	F8	CH08	D3	JA02	F11	QQ52	E3	R753	D11	RM58	F8				
C601	C5	CH09	D2	JA03	E11	QR01	I11	R754	D11	RM59	F8				
C602	B5	CH10	C2	JE01	J11	QR02	I11	R755	D11	RM82	I7				
C603	C5	CL01	C8	JH04	B3	QR51	I8	R756	D11	RM84	I7				
C604	B5	CL02	D8	JH06	D3	QR52	I8	R758	D10	RM86	I7				
C605	C6	CL03	C7	JM01	H7	QU01	I3	R761	D10	RM88	H7				
C606	B6	CL04	C6	JM02	F6	QU02	D6	R762	C10	RM89	I7				
C607	C6	CL05	C8	JM03	F5	QU03	J4	R763	D11	RM90	I7				
C608	B6	CL06	D8	JM04	F8	QU04	J4	R764	C11	RM91	I7				
C609	C6	CL07	C8	JR01	J11	QU11	H11	R767	C10	RM92	J8				
C610	B6	CL08	D8	JU01	H4	QU12	H11	R768	B10	RM93	J8				
C611	C6	CM01	H6	JU02	F3	QU13	D8	R769	C11	RQ01	E5				
C612	B6	CM21	H8	JU03	F4	QU14	J3	R770	B11	RQ03	E3				
C613	E4	CM22	F5	JU04	I4	QU16	H11	R771	C10	RQ06	E5				
C622	B7	CM51	F8	L451	F8	QU17	B10	R781	D11	RQ07	E3				
C623	C7	CM52	G8	L701	D5	QU18	H11	R782	C11	RQ10	D4				
C631	C4	CQ01	E4	L711	D11	QU19	H11	R783	D10	RQ15	E4				
C632	B4	CQ02	E5	L712	C11	QU21	E2	R784	C10	RQ17	E4				
C633	C4	CQ04	E5	L713	C11	QU22	D2	R785	C11	RQ21	D4				
C634	B4	CQ06	E4	L714	B11	QU32	F6	R786	B11	RQ21	E4				
C635	C4	CQ08	E5	L715	E11	QU33	D7	R787	C10	RQ22	E4				
C636	B5	CQ09	E4	L716	F11	QU41	E10	R788	B10	RQ23	D4				
C637	C4	CQ10	E4	L717	D11	QU52	H11	R801	J10	RQ23	E4				
C638	B4	CQ22	E4	L718	D11	QU53	H11	R802	J10	RQ31	C3				
C639	C3	CQ51	D3	L719	J11	QU54	J7	R803	J10	RQ32	B3				
C640	B3	CQ52	D3	L721	J11	QU55	J7	R804	J10	RQ51	D3				
C641	C4	CQ53	D3	LA01	F11	QU56	J7	R805	J10	RQ52	C3				
C642	B4	CQ54	C4	LA02	G11	QU57	H11	R806	J10	RQ53	D3				
C643	C3	CQ55	D3	LA03	G11	QU61	J8	R807	J8	RQ54	D3				
C644	B3	CR01	I11	LA10	F9	QU62	J8	R808	J8	RQ55	D4				
C671	C5	CR02	I11	Q031	G8	QU63	J9	R809	J8	RQ56	D4				
C672	B5	CR03	J11	Q601	B6	QU64	H8	R810	B7	RQ57	D4				
C704	C5	CR04	J11	Q602	B4	QU65	H9	R811	C7	RQ58	C3				
C721	C10	CR05	J11	Q611	H2	QU81	G4	R812	B7	RQ59	D3				
C722	B9	CU01	I4	Q612	C4	R032	G7	R813	B7	RQ60	C3				
C726	B10	CU02	I4	Q613	C5	R033	G7	R814	J11	RQ61	C3				
C727	C10	CU21	E2	Q641	C3	R035	G7	R816	H10	RQ62	C3				
C728	C9	CU22	D2	Q642	B3	R038	G8	R842	G9	RQ63	D3				
C729	C9	CU31	E7	Q671	C5	R196	E11	RA01	F11	RQ64	D3				
C731	B11	CU51	H11	Q672	B5	R204	E11	RA02	F11	RR01	I11				
C732	B11	CU52	J11	Q701	D6	R571	E11	RA03	G11	RR02	J11				
C733	B11	CU54	J8	Q702	D5	R579	E11	RA04	E11	RR03	J11				
C740	D11	CU57	J7	Q720	C10	R605	C6	RA05	E11	RR04	I11				
C741	C11	CU81	G4	Q731	B11	R606	B6	RA07	F11	RR05	I11				
C742	E11	CU82	G4	Q751	D10	R607	C6	RA08	G10	RR06	I11				
C750	D11	D031	G7	Q761	D10	R608	B6	RA09	G11	RR07	J11				
C752	D11	D032	G7	Q762	C11	R609	C6	RA10	F10	RR51	I8				
C753	D11	D641	C3	Q763	D11	R610	B6	RA12	G11	RR52	I8				
C754	D11	D701	D6	Q764	C11	R612	C4	RA13	G11	RU01	D8				
C756	D10	D702	B10	Q765	C11	R613	C5	RA14	F11	RU02	D8				
C757	E11	D703	C10	Q766	B11	R621	C6	RA15	G11	RU03	D6				
C761	C11	D817	J8	Q767	C11	R622	B6	RA16	F9	RU04	I4				
C762	C11	D818	C7	Q768	B11	R631	C3	RA17	G11	RU06	I4				
C763	C11	D819	C7	Q806	C7	R632	B3	RH02	B2	RU07	I4				
C764	B11	D822	I9	Q807	B7	R633	C3	RH05	B1	RU08	I4				
C801	I11	D823	C7	Q809	H10	R635	C5	RH06	B1	RU09	E3				
C802	I10	D824	B7	Q810	H10	R636	B5	RH07	D2	RU10	E2				
C803	J9	D828	G9	Q811	G9	R637	C4	RH08	C2	RU11	H11				
C804	I9	D841	E7	Q812	F9	R638	B5	RH09	D2	RU12	H11				
C806	J9	DH01	B8	Q843	G9	R639	C5	RH10	C2	RU14	J3				
C809	H9	DH02	B8	QA01	G10	R640	B5	RH11	D2	RU15	D6				
C811	I8	DH03	B8	QA02	F10	R641	C3	RH12	D2	RU16	H11				
C812	C7	DH04	B8	QA03	G11	R642	B3	RH13	D2	RU17	H11				
C813	C7	DM01	H6	QA04	G11	R643	B3	RH14	D2	RU21	H9				
C841	F9	DM21	G6	QE01	J11	R643	C4	RH29	B2	RU23	E3				
C842	F9	DM22	G6	QE02	J9	R644	B4	RH30	B3	RU30	J3				
C891	J10	DM23	G5	QH02	C2	R645	C4	RL01	C7	RU31	J3				
CA01	H10	DM51	G9	QH05	D2	R646	B4	RL02	C6	RU33	J4				
CA02	G10	DM52	G8	QH06	C3	R647	C4	RL03	C7	RU39	J4				
CA03	F11	DM52	G8	QH07	B1	R648	B4	RL04	C6	RU42	F10				
CA04	E11	DR01	J11	QH08	B2	R670	H5	RL05	C7	RU43	E6				
CA05	G11	DU11	H11	QL01	D6	R671	C5	RL06	C6	RU45	E2				
CA06	G11	DU51	H11	QL02	C8	R672	B5	RL07	C8	RU46	E2				
CA07	E11	DU53	I11	QM01	H6	R673	I7	RL08	D8	RU51	H11				
CA08	F11	DU61	J8	QM02	H5	R674	I8	RL09	C8	RU53	J11				
CA09	G10	DU62	J8	QM03	H6	R701	C5	RL10	D8	RU54	H11				
CA11	F11	GU01	I4	QM04	H5	R702	C6	RL11	D9	RU55	J7				
CA12	F11	GU81	G4	QM21	H7	R703	C5	RL12	D9	RU56	J7				
CA13	F11	J311	D5	QM22	G6	R704	C5	RM01	H6	RU57	I7				
CA14	F11	J312	D8	QM51	G8	R705	C6	RM02	H5	RU61	J9				
CA16	F9	J313	D9	QM81	J7	R706	D6	RM03	H6	RU62	J9				
CA17	E11	J421	E8	QM82	I7	R707	D6	RM04	H5	RU63	H8				
CA18	E11	J601	B7	QM83	I7	R720	B10	RM05	H5	RU70	E6				
CA19	G11	J611	E7	QM84	J7	R721	C10	RM21	G5	RU71	G9				
CE01	J11	J612	C2	QM85	I7	R722	B10	RM22	G5	SR01	I11				
CE03	J11	J701	E10	QM86	I7	R726	B10	RM23	G5	U001	J2				
CH01	B1	J702	D4	QM87	J8	R727	C10	RM24	G5	U001	J4				
CH02	C2	J740	C11	QQ01	E4	R728	C9	RM25	G5	U002	J3				
CH03	B2	J741	B11	QQ03	E4	R729	C9	RM51	G8	U003	J4				
CH04	B2	J742	D11	QQ04	E3	R731	B9	RM52	G9	U005	J3				
CH04	C2	J821	J10	QQ05	E5	R732	B10	RM54	G5	U006	J3				

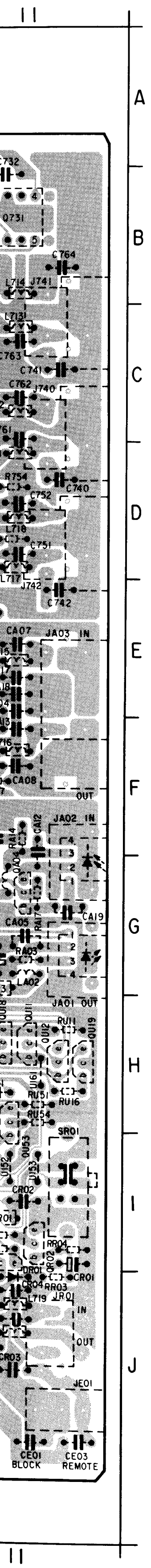

09D411-3

C031	G7
C032	G7
C033	J4
C451	F8
C601	C5
C602	B5
C603	C5
C604	B5
C605	C6
C606	B6
C607	C6
C608	B6
C609	C6
C610	B6
C611	C6
C612	B6
C613	E4
C622	B7
C623	C7
C631	C4
C632	B4
C633	C4
C634	B4
C635	C4
C636	B5
C637	C4
C638	B4
C639	C3
C640	B3
C641	C4
C642	B4
C643	C3
C644	B3
C671	C5
C672	B5
C704	C5
C721	C10
C722	B9
C726	B10
C727	C10
C728	C9
C729	C9
C731	B11
C732	B11
C733	B11
C740	D11
C741	C11
C742	E11
C750	D11
C752	D11
C753	D11
C754	D11
C756	D10
C757	E11
C761	C11
C762	C11
C763	C11
C764	B11
C801	I11
C802	I10
C803	J9
C804	I9
C806	J9
C809	H9
C811	I8
C812	C7
C813	C7
C841	F9
C842	F9
C891	J10
CA01	H10
CA02	G10
CA03	F11
CA04	E11
CA05	G11
CA06	G11
CA07	E11
CA08	F11
CA09	G10
CA11	F11
CA12	F11
CA13	F11
CA14	F11
CA16	F9
CA17	E11
CA18	E11
CA19	G11
CE01	J11
CE03	J11
CH01	B1
CH02	C2
CH03	B2
CH04	B2
CH04	C2

CH05	D2
CH06	D2
CH07	D2
CH08	D3
CH09	D2
CH10	C2
CL01	C8
CL02	D8
CL03	C7
CL04	C6
CL05	C8
CL06	D8
CL07	C8
CL08	D8
CM01	H6
CM21	H8
CM22	F5
CM51	F8
CM52	G8
CQ01	E4
CQ02	E5
CQ04	E5
CQ06	E4
CQ08	E5
CQ09	E4
CQ10	E4
CQ22	E4
CQ51	D3
CQ52	D3
CQ53	D3
CQ54	C4
CQ55	D3
CR01	I11
CR02	I11
CR03	J11
CR04	J11
CR05	J11
CU01	I4
CU02	I4
CU21	E2
CU22	D2
CU31	E7
CU51	H11
CU52	J11
CU54	J8
CU57	J7
CU81	G4
CU82	G4
D031	G7
D032	G7
D641	C3
D701	D6
D702	B10
D703	C10
D817	J8
D818	C7
D819	C7
D822	I9
D823	C7
D824	B7
D828	G9
D841	E7
DH01	B8
DH02	B8
DH03	B8
DH04	B8
DM01	H6
DM21	G6
DM22	G6
DM23	G5
DM51	G9
DM52	G8
DM52	G8
DR01	J11
DU11	H11
DU51	H11
DU53	I11
DU61	J8
DU62	J8
GU01	I4
GU81	G4
J311	D5
J312	D8
J313	D9
J421	E8
J601	B7
J611	E7
J612	C2
J701	E10
J702	D4
J740	C11
J741	B11
J742	D11
J821	J10

J873	H10
J874	H9
JA01	G11
JA02	F11
JA03	E11
JE01	J11
JH04	B3
JH06	D3
JM01	H7
JM02	F6
JM03	F5
JM04	F8
JR01	J11
JU01	H4
JU02	F3
JU03	F4
JU04	I4
L451	F8
L701	D5
L711	D11
L712	C11
L713	C11
L714	B11
L715	E11
L716	F11
L717	D11
L718	D11
L719	J11
L721	J11
LA01	F11
LA02	G11
LA03	G11
LA10	F9
Q031	G8
Q601	B6
Q602	B4
Q611	H2
Q612	C4
Q613	C5
Q641	C3
Q642	B3
Q671	C5
Q672	B5
Q701	D6
Q702	D5
Q720	C10
Q731	B11
Q751	D10
Q761	D10
Q762	C11
Q763	D11
Q764	C11
Q765	C11
Q766	B11
Q767	C11
Q768	B11
Q806	C7
Q807	B7
Q809	H10
Q810	H10
Q811	G9
Q812	F9
Q843	G9
QA01	G10
QA02	F10
QA03	G11
QA04	G11
QE01	J11
QE02	J9
QH02	C2
QH05	D2
QH06	C3
QH07	B1
QH08	B2
QL01	D6
QL02	C8
QM01	H6
QM02	H5
QM03	H6
QM04	H5
QM21	H7
QM22	G6
QM51	G8
QM81	J7
QM82	I7
QM83	I7
QM84	J7
QM85	I7
QM86	I7
QM87	J8
QQ01	E4
QQ03	E4
QQ04	E3
QQ05	E5

QQ06	E5
QQ21	E4
QQ51	D4
QQ52	E3
QR01	I11
QR02	I11
QR51	I8
QR52	I8
QU01	I3
QU02	D6
QU03	J4
QU04	J4
QU11	H11
QU12	H11
QU13	D8
QU14	J3
QU16	H11
QU17	B10
QU18	H11
QU19	H11
QU21	E2
QU22	D2
QU32	F6
QU33	D7
QU41	E10
QU52	H11
QU53	H11
QU54	J7
QU55	J7
QU56	J7
QU57	H11
QU61	J8
QU62	J8
QU63	J9
QU64	H8
QU65	H9
QU81	G4
R032	G7
R033	G7
R035	G7
R038	G8
R196	E11
R204	E11
R571	E11
R579	E11
R605	C6
R606	B6
R607	C6
R608	B6
R609	C6
R610	B6
R612	C4
R613	C5
R621	C6
R622	B6
R631	C3
R632	B3
R633	C3
R635	C5
R636	B5
R637	C4
R638	B5
R639	C5
R640	B5
R641	C3
R642	B3
R643	B3
R643	C4
R644	B4
R645	C4
R646	B4
R647	C4
R648	B4
R670	H5
R671	C5
R672	B5
R673	I7
R674	I8
R701	C5
R702	C6
R703	C5
R704	C5
R705	C6
R706	D6
R707	D6
R720	B10
R721	C10
R722	B10
R726	B10
R727	C10
R728	C9
R729	C9
R731	B9
R732	B10

R733	C10
R734	B10
R752	D10
R753	D11
R754	D11
R755	D11
R756	D11
R758	D10
R761	D10
R762	C10
R763	D11
R764	C11
R767	C10
R768	B10
R769	C11
R770	B11
R771	C10
R781	D11
R782	C11
R783	D10
R784	C10
R785	C11
R786	B11
R787	C10
R788	B10
R801	J10
R802	J10
R803	J10
R804	J10
R805	J10
R806	J10
R807	J8
R808	J8
R809	J8
R810	B7
R811	C7
R812	B7
R813	B7
R814	J11
R816	H10
R842	G9
RA01	F11
RA02	F11
RA03	G11
RA04	E11
RA05	E11
RA07	F11
RA08	G10
RA09	G11
RA10	F10
RA12	G11
RA13	G11
RA14	F11
RA15	G11
RA16	F9
RA17	G11
RH02	B2
RH05	B1
RH06	B1
RH07	D2
RH08	C2
RH09	D2
RH10	C2
RH11	D2
RH12	D2
RH13	D2
RH14	D2
RH29	B2
RH30	B3
RL01	C7
RL02	C6
RL03	C7
RL04	C6
RL05	C7
RL06	C6
RL07	C8
RL08	D8
RL09	C8
RL10	D8
RL11	D9
RL12	D9
RM01	H6
RM02	H5
RM03	H6
RM04	H5
RM05	H5
RM21	G5
RM22	G5
RM23	G5
RM24	G5
RM25	G5
RM51	G8
RM52	G9
RM54	G5

RM55	G5
RM56	G5
RM57	G8
RM58	F8
RM59	F8
RM82	I7
RM84	I7
RM86	I7
RM88	H7
RM89	I7
RM90	I7
RM91	I7
RM92	J8
RM93	J8
RQ01	E5
RQ03	E3
RQ06	E5
RQ07	E3
RQ10	D4
RQ15	E4
RQ17	E4
RQ21	D4
RQ21	E4
RQ22	E4
RQ23	D4
RQ23	E4
RQ31	C3
RQ32	B3
RQ51	D3
RQ52	C3
RQ53	D3
RQ54	D3
RQ55	D4
RQ56	D4
RQ57	D4
RQ58	C3
RQ59	D3
RQ60	C3
RQ61	C3
RQ62	C3
RQ63	D3
RQ64	D3
RR01	I11
RR02	J11
RR03	J11
RR04	I11
RR05	I11
RR06	I11
RR07	J11
RR51	I8
RR52	I8
RU01	D8
RU02	D8
RU03	D6
RU04	I4
RU06	I4
RU07	I4
RU08	I4
RU09	E3
RU10	E2
RU11	H11
RU12	H11
RU14	J3
RU15	D6
RU16	H11
RU17	H11
RU21	H9
RU23	E3
RU30	J3
RU31	J3
RU33	J4
RU39	J4
RU42	F10
RU43	E6
RU45	E2
RU46	E2
RU51	H11
RU53	J11
RU54	H11
RU55	J7
RU56	J7
RU57	I7
RU61	J9
RU62	J9
RU63	H8
RU70	E6
RU71	G9
SR01	I11
U001	J2
U001	J4
U002	J3
U003	J4
U005	J3
U006	J3

U007	J3
U008	J3
U009	J4
U010	I2
U011	I2
U012	I2
U013	I4
U014	I5
U015	I5
U016	I5
U017	H5
U018	I6
U019	G6
U020	H2
U021	H2
U022	H2
U023	H2
U024	H2
U025	H2
U026	H2
U027	H3
U028	H3
U028	H3
U029	H4
U030	H4
U031	H4
U032	H4
U033	H4
U034	H4
U035	H4
U036	H4
U037	H4
U038	H5
U039	G3
U040	G3
U041	G3
U042	G3
U043	G4
U044	H4
U045	G4
U046	G2
U047	G3
U048	G3
U049	G3
U050	G3
U051	G3
U052	G3
U053	F3
U054	G3
U055	G4
U056	G4
U057	G4
U058	G4
U059	G5
U060	G5
U061	F3
U062	F2
U063	F3
U064	F4
U065	F2
U066	F2
U067	F2
U068	F2
U069	F2
U070	E2
U071	E2
U072	E2
U073	E2
U074	E1
U075	F3
U076	F4
U077	F4
U078	F5
U079	F5
U080	D2
U081	D2
U082	E2
U083	E2
U084	E3
U085	E3
U087	F4
U088	F4
U089	E5
U090	E5
U091	F5
U092	F5
U093	F5
U094	F6
U095	E6
U096	E6
U097	F6
U098	F6
U099	F6
U100	F7

U101	F7
U102	E6
U103	E5
U104	D6
U105	E6
U106	E6
U107	D6
U108	E6
U109	E6
U110	D6
U111	E7
U112	D2
U113	D3
U115	D3
U116	D5
U117	D6
U118	C5
U119	C2
U120	B2
U121	C2
U122	B4
U124	B4
U125	C5
U126	C5
U127	C7
U128	B7
U129	B7
U130	I7
U131	H7
U132	J7
U133	J7
U134	J7
U135	J7
U136	J7
U137	J7
U138	J7
U139	I7
U140	I8
U141	J8
U142	J8
U143	J8
U144	J9
U145	J9
U146	J10
U147	J10
U148	J11
U149	I10
U150	I10
U151	I11
U152	I11
U153	I11
U154	H8
U155	H8
U156	H8
U157	H8
U158	H9
U159	H9
U160	H10
U161	H11
U162	G7
U163	G7
U164	H8
U165	H8
U166	H10
U167	H9
U168	G9
U169	G10
U171	G10
U172	G9
U173	G9
U174	G9
U175	G8
U176	G9
U177	F10
U178	F7
U179	F7
U180	F7
U181	F7
U182	F8
U183	F8
U184	F8
U185	F8
U186	F9
U187	F9
U188	F10
U189	F10
U190	F10
U192	F11
U193	F10
U194	F10
U195	F10
U197	E10
U199	E9
U200	E9

U201	E9
U202	D8
U203	D7
U206	D10
U207	D9
U209	D9
U210	D9
U211	D10
U212	D9
U213	D9
U214	D10
U215	D10
U216	C10
U217	C9
U218	C9
U219	C9
U220	C8
U221	C8
U222	C8
U223	C8
U224	C8
U225	B8
U226	B8
U227	B8
U228	B9
U230	C10
U231	B10
U232	B10
U233	B10
U234	B10
U236	H9
U237	D2
U238	D2
U239	C10
U240	C10
U241	E9
U243	D10
U244	G10
U245	F10
U246	I2
U247	J3
U248	F5
U249	I5
U250	H3
U251	E9
U252	J7
U325	H10
XU01	J3

POWER SUPPLY PCB (PP03)

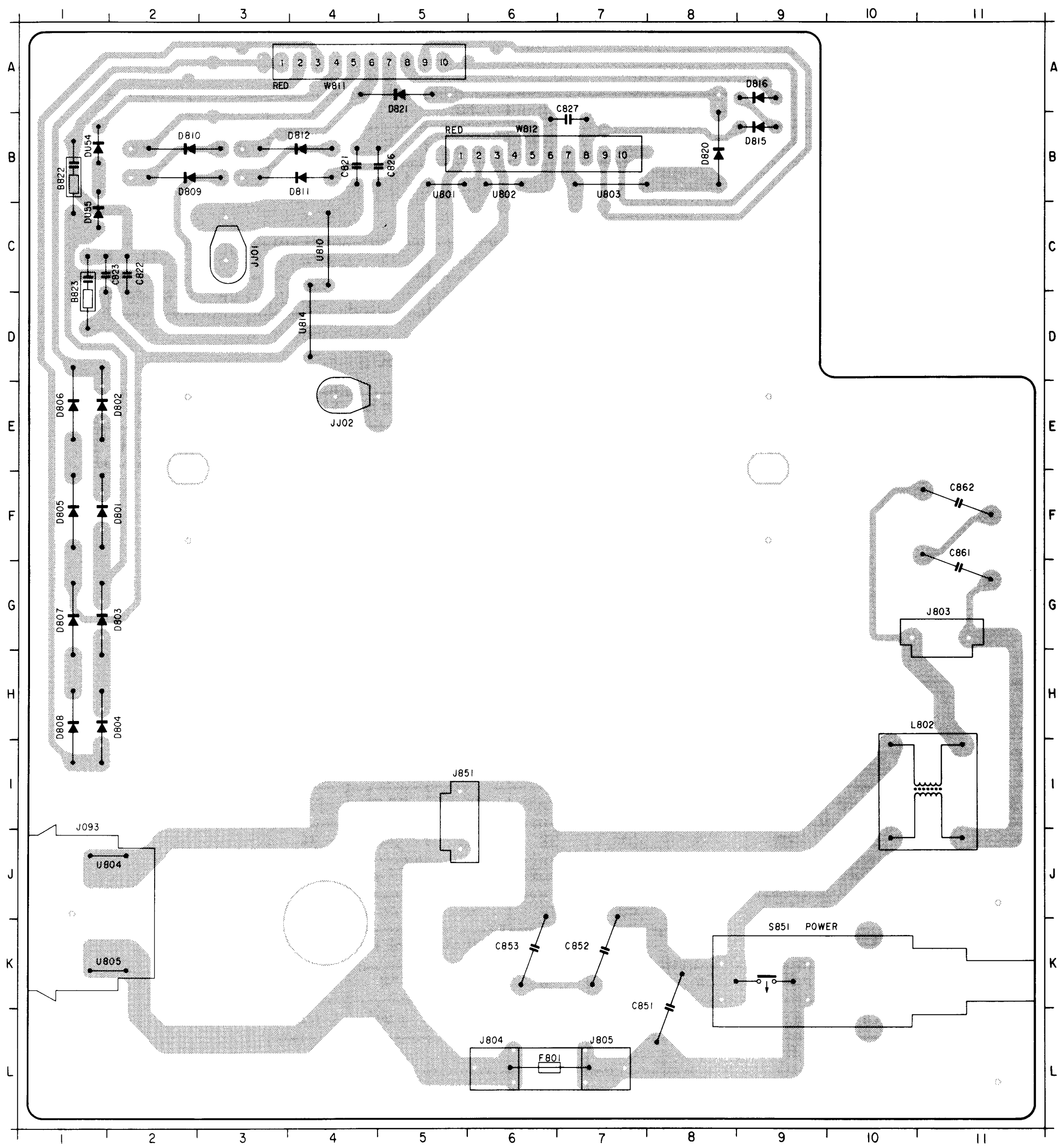

YN009D221-3

B822	B1
B823	D1
C821	B4
C822	C2
C823	C1
C826	B4
C827	B7
C851	K8
C852	K7
C853	K6
C861	G11
C862	F11
D801	F1
D802	E1
D803	G1
D804	H1
D805	F1
D806	E1
D807	G1
D808	H1
D809	B2
D810	B2
D811	B4
D812	B4
D815	B9
D816	A9
D820	B8
D821	A5
DU54	B1
DU55	C1
F801	L6
J093	J1
J804	L6
J805	L7
J851	I5
J861	G11
JJ01	C3
JJ02	E4
L802	I11
S851	K9
U801	B5
U802	B6
U803	B7
U804	J1
U805	K1
U810	C4
U814	D4
W811	A4
W812	B6

DC SUPPLY PCB (PS03)

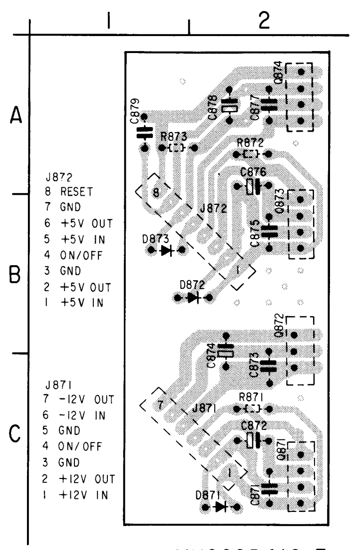

YK009D412-3

C871	C2
C872	C2
C873	C2
C874	A2
C874	B2
C875	B2
C876	A2
C877	A2
C878	A2
C879	A1
D871	C2
D872	B2
D873	B1
J871	C2
J872	B2
Q871	C2
Q872	B2
Q873	B2
R871	C2
R872	A2
R873	A1

POWER TRANSFORMER TERMINAL PCB (PP63)

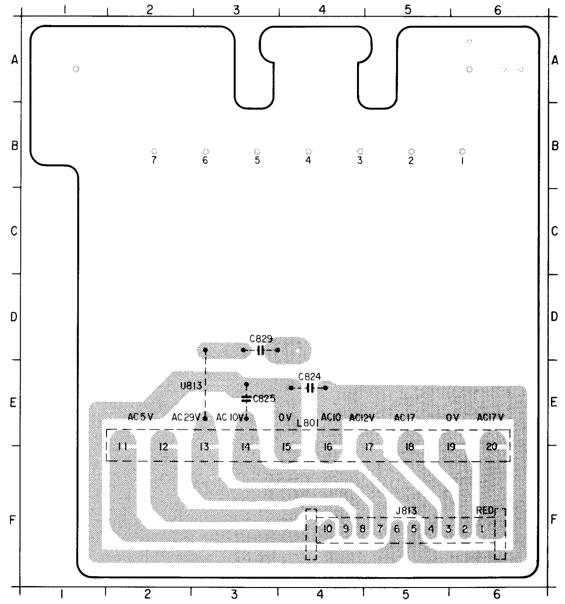

YN009D222-3

C824	E4
C825	E3
C829	D3
J813	F5
L801	E4
U813	E3

PP03 POWER SUPPLY PCB
/00/05/06/10/USA (BK01)

PP63 POWER TRANSFORMER TERMINAL PCB

PP63 /06/USA (BK01)

PG03-1/6 MAIN PCB
POWER CIRCUIT

PS03 DC SUPPLY PCB

PP03 POWER SUPPLY PCB
/01 ONLY

PP63

POSITION	Ⓐ	Ⓑ	Ⓒ	Ⓓ
SHORT PIN NO.	1-2,5-6	2-3,6-7	3-4,7-8	4-5,8-1
VOLTAGE	110V	120V	240V	220V

J091
VOLTAGE SELECTOR

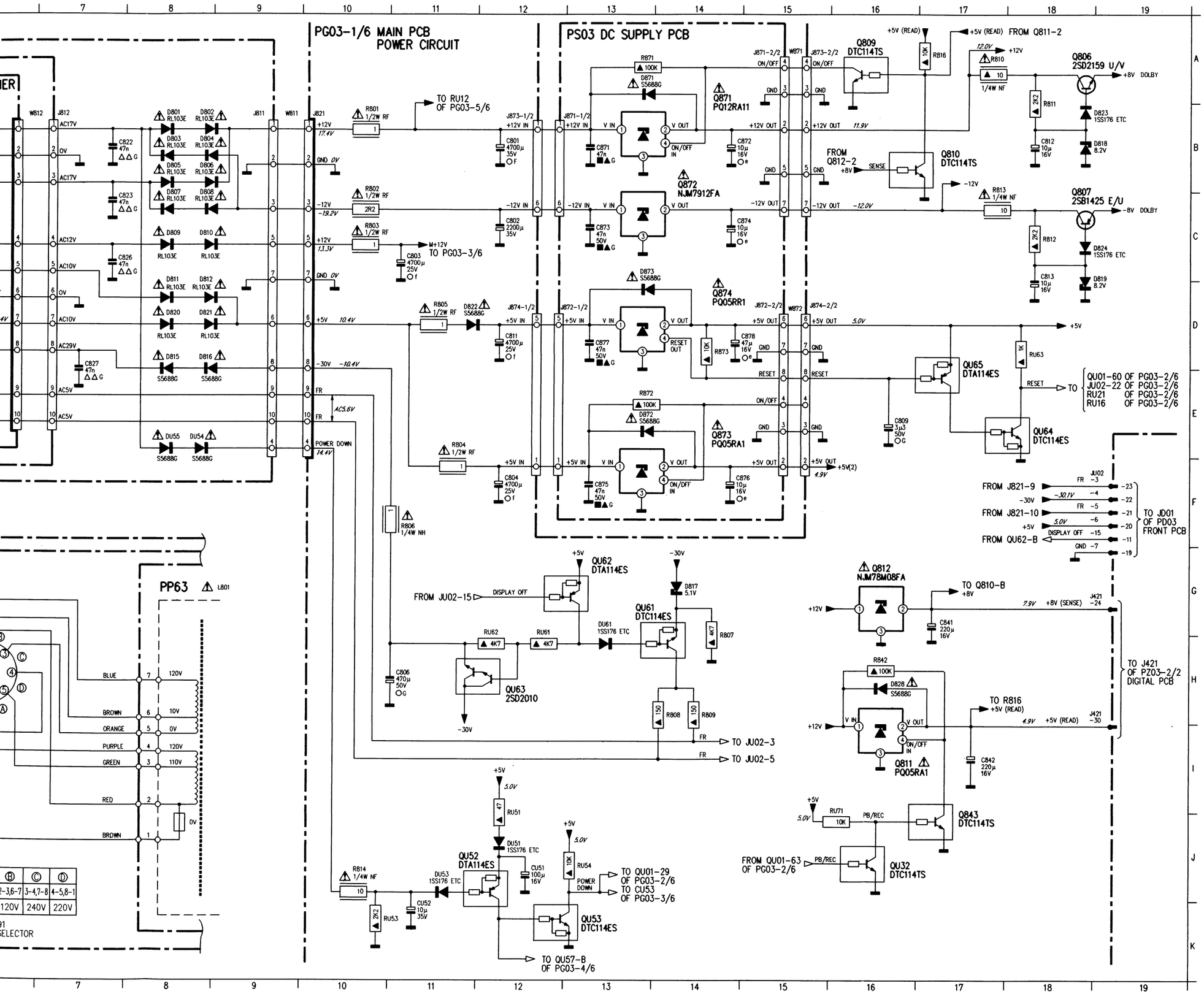

C801	B12	J811	B9
C802	C12	J812	B7
C803	C11	J813	B6
C804	F12	J821	B10
C806	H11	J851	C1
C809	E16	J851	H1
C811	D12	J871	B12
C812	B18	J872	D12
C813	C18	J873	B12
C822	B7	J874	D12
C823	C7	JU02-15	F19
C824	D6	JU02-3	F19
C825	D6	JU02-4	F19
C826	C7	JU02-5	F19
C827	E7	JU02-6	F19
C841	G17	L801	B5
C842	I17	L801	G8
C851	C2	L802	C3
C851	I2	L802	H3
C852	C2	Q806	A18
C852	H2	Q807	C18
C853	C2	Q809	A16
C853	H2	Q810	B16
C861	C4	Q811	I16
C861	H4	Q812	G16
C862	C4	Q843	J17
C862	H4	Q871	B13
C871	B13	Q872	C13
C872	B14	Q873	F13
C873	C13	Q874	D13
C874	C14	QU32	J16
C875	F13	QU52	J12
C876	F14	QU53	K12
C877	D13	QU61	G14
C878	D14	QU62	G13
CU51	J12	QU63	H12
CU52	K11	QU64	E18
D801	B8	QU65	E17
D802	B8	R801	B10
D803	B8	R802	C10
D804	B8	R803	C10
D805	B8	R804	F11
D806	B8	R805	D11
D807	C8	R806	F11
D808	C8	R807	G14
D809	C8	R808	H14
D810	C8	R809	H14
D811	D8	R810	A17
D812	D8	R811	A18
D815	D8	R812	C18
D816	D8	R813	C17
D817	G14	R814	J10
D818	B18	R816	A17
D819	C18	R842	H16
D820	D8	R871	A13
D821	D8	R872	E13
D822	D11	R873	D14
D823	B18	RU51	I12
D824	C18	RU53	K10
D828	H16	RU54	J13
D871	A13	RU61	H12
D872	E13	RU62	H12
D873	D13	RU63	D18
DU51	J12	RU71	J16
DU53	J11	S851	D2
DU54	E8	S851	I2
DU55	E8	W001	C1
DU61	H13	W001	H1
F801	C2	W803	E2
F801	H2	W803	H4
J091	H6		
J421-24	G19		
J421-30	I19		
J803	C4		
J803	H4		

PG03-2/6 MAIN PCB
μ-COM CIRCUIT

QU01 UPD75P518 μ-COM

FROM J421 OF PZ03 DIGITAL PCB
-1/2 -1 (UNLOCK)
-1/2 -4 D-GND
-1/2 -8 D-GND
-2/2 -11 LABEL → TO QU01-30
-1/2 -10 IM START → TO QU01-15
-1/2 -9 IRQU → TO QU01-48 → TO JU03-7(T.P.)
-2/2 -20 START SEG → TO QU01-47
-2/2 -19 A ENV

FROM QQ01-6 OF HEADPHONE CIRCUIT 6/6 QMS

FROM JY01 AD PORT
JU04 -2 DEBUG 2
-5 DEBUG 1
-4 DEBUG 0
-3
-1

FROM MECHA CIRCUIT OF PG03-3/6
QR52-C T-REEL
QR51-C S-REEL
FROM J421-20 JU03-7 START SEG
FROM J421-9 IRQU
FROM J421-32 LT DATA IN

FROM JW05 OF PM03 TRAY WIRE CONNECTIV ,SERVO PCB
JU01 -1 LNG2
-3 LNG1
-4 LNG0
-6 REC PROTECT
-5 DCC/ACC
-2 GND

FROM JM01-2 OF PG03-3/6 TAPE IN
FROM JM01-3 OF PG03-3/6 LEADER, MODE SW
FROM QU53-C OF POWER SUPPLY CIRCUIT -1/6 P50, POWER DOWN
FROM J421 -11 LABEL, -39 VIRGIN, -41 U SYNC 0, -10 IM START
FROM GU81-2 N.C
FROM QU81-3 DATA IN
FROM QU64-C OF PG03-1/6 RESET

Q031-2/2 TA75358
Q031-1/2 TA75358 QUICK SENSOR

FROM JW05 OF PM03 TRAY WIRE CONNECTIV ,SERVO PCB
JM04 -5
-3 OUT
-4 GND

FROM J421 OF PZ03 DIGITAL PCB
J421 -41 U SYNC 0 → TO QU01-16
-39 VIRGIN → TO QU01-31
-32 LT-DATA → TO QU01-50
-35 (D-GND) → TO JU03-8(T.P)

FROM JD01 OF PD03 FRONT PCB
JU02 -19 Si ← FROM QU21-3,-6
-12 ACK → TO QU01-41
-13 READY → TO QU01-43
-20 SO → TO QU21-5 RU09

BASIC INTERVAL TIMER
TIMER EVENT COUNTER PWM CAP
TIMER PULSE GEN.
SERIAL BUS INT.
INTERRUPT CONTROL
A/D CONVERTER
PORT12
PORT5
PORT9
PROGRAM COUNTER (15)
ROM PROGRAM MEMORT
DECODE AND CONTROL
ALU
CY
SP(8)
SBS(2)
BANK
GENERAL REG
RAM DATA MEMORY 1024x4BITS
B/T SEQ BUFFER (16)
PORT3
PORT2
PORT7
PORT6
PORT10
PORT11
PORT13
PORT14
SERIAL BUS INT.
STANBY CONTROL
CLOCK GENERATOR
MAIN
SUB
CLOCK DIVIDER
CLOCK OUTPUT CONTROL
CPU CLOCK
fx/2^N
PORT8 SERIAL INTERFACE
PORT4
A/D CONVERTER

ACK → FROM JU02-12
START TEST POINT
START → TO JU02-14
READY → TO JU02-13
DISFRT → TO QU21-4
SIO IN/OUT → TO QU21-1
LT DATA OUT → TO QU21-2
LT CLOCK → TO QU81-3
BRK SOL2 → TO QM82-B
BRK SOL1 → TO QM83-B
TRG SOL → TO RU57
CAP.MOTOR → TO QM04-B
PWM
REEL SPEED → TO QM22-B
REV → TO RM25
FWD → TO RM24
OF PG03-3/6
CS → TO QU81-1
U SYNC1 → TO QU81-3
LT CONT1 → TO QU81-2
LT CONT0
LT EN EQU → LT- DEQ
LT EN DA1 → LT- DA1
LT EN DSP → LT- DDSP
LT EN ADAS → LT- ADAS
DE ENPHASIS
44K
48K
LINE MUTE → TO QU14-B, TO Q613-B OF PG03-5/6
DOLBY C
DOLBY OFF → TO Q611-E OF PG03-5/6
P.B/REC → TO QQ52-B OF PG03-6/6
DCC/CC → TO D641 OF PG03-5/6, TO Q702-B OF PG03-4/6

QU81 BR93LC46 EEP ROM
FROM QU01-9 ,10,11 LT CONT 0, LT CONT 1
TO QU01-13 TO QU01-14
CS, SK, DI, DO, VCC, N.C, GND
CU81 47μ 16V
CU82 100n 50V
GU81 10K ×6

FROM QU01-42 START
FROM QU01-52 SCK
QU01-60 FROM QU64-C OF PG03-1/6 RESET
TO JD01 OF PD03 FRONT PCB

TO J303 OF PA03-2/2 AD/DA PCB
TO J421 OF PZ03 DIGITAL PCB
TO J302 OF PA03-2/2 AD/DA PCB
TO J421 OF PX03 DIGITAL PCB
TO J302 OF PA03-1/2 AD/DA PCB

SCK → TO JU02-21
LT CLK → TO J421-34
LT INTERFACE TEST PINT JU03
FROM J421-32, QU01-50 FROM J421-20, QU01-47
D-GND, +5V, LT-CLK, LT-DATA (Si), S-SEG, LT-CNT1, LT-CNT0, LT-DEQ, LT-DA1, LT-DDSP, LT-ADAS
TO J421

FROM QU01
LT-DAI -13 -1/2
N.C(MUTE DAC) -14 -2/2
N.C(DE EMPHA) -15 -2/2
N.C(ATT DAC) -16 -2/2
LT DOSP -17 -2/2
LT DEQ -18 -2/2
LT CLK -34 -1/2
GND -21 -1/2
+5V -22 -2/2
GND -23 -2/2
+5V(WRITE) -25 -2/2

L881 22n
C881 470μ 16V
D841 S5688G
+5V (DIGITAL) 4.9V
+5V (2)
LT-CNT0 4.9V

QU21-1/4 74HC125
JU02-20 SO
FROM QU01-44 DIS FRT
FROM QU01-50 JU03-8 J421-32 SIO IN/OUT
FROM QU01 RU33 LT DATA
RU09 RU10 10K
5.0V

QU21-2/4 74HC125
DE ENPHASIS

QU04 DTA114ES
QU03 DTA114ES
QU02 DTC114TS
QU33 DTA144ES

44K-FS
48K-FS
RU01 RU02 RU03 10K
-12.0V
-12V

CC/DCC -26 -2/2
(D-GND) -33 -2/2
ADC CAL -9
D-GND -8
D

RU15 1K
RU31 4K7
RU30 10K
RU70 10K

XU01 4.19MHz
CU31 1μ 50V
TO RA08 OF PG03-4/6

CU02 100n 50V
CU01 47μ 16V
R039 100K
C033 2μ2 50V
D032 1SS176 ETC
R032 10K
R033 1K
C031 4μ7 50V
C032 10μ 16V
R035 100K
RU04 RU06 RU07 RU08 10K

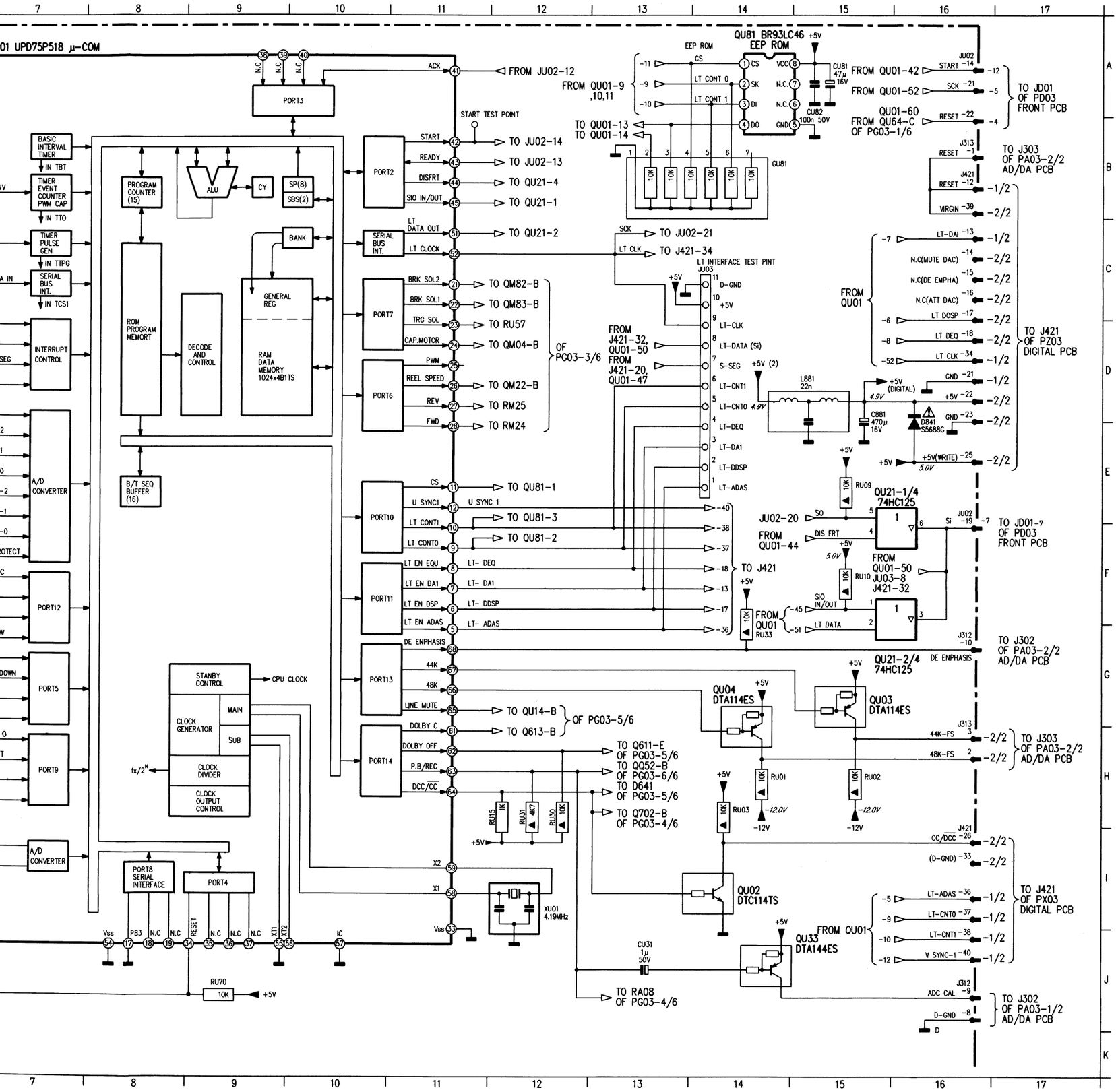

C031	H3	JU02-12	J2
C032	H3	JU02-13	J2
C033	G4	JU02-14	A16
C881	D15	JU02-19	F16
CU01	B6	JU02-19	J2
CU02	B5	JU02-20	J2
CU31	J13	JU02-21	A16
CU81	A15	JU03	C14
CU82	A15	JU03-1	E14
D032	G5	JU03-2	E14
D841	D16	JU03-3	E14
GU01	D3	JU03-4	E14
GU81	B14	JU04-1	D2
J312-10	G16	JU04-2	C2
J312-8	J16	JU04-3	D2
J312-9	J16	JU04-4	D2
J313-1	B16	JU04-5	C2
J313-2	H16	L881	D15
J313-3	H16	Q031-1/2	H4
J421-1	A2	QU01	A7
J421-10	B2	QU02	I14
J421-11	A2	QU03	G15
J421-12	B16	QU04	G14
J421-13	C16	QU21-1/4	E16
J421-14	C16	QU21-2/4	F16
J421-15	C16	QU31-2/2	G3
J421-16	C16	QU33	J14
J421-17	C16	QU81	A14
J421-18	D16	R032	G3
J421-19	B2	R033	H3
J421-20	B2	R035	H4
J421-21	D16	R039	G4
J421-22	D16	RU01	H14
J421-23	D16	RU02	H15
J421-25	E16	RU03	H14
J421-26	I16	RU04	D4
J421-32	I2	RU06	E4
J421-33	I16	RU07	E4
J421-34	D16	RU08	E4
J421-35	J2	RU09	E15
J421-36	I16	RU10	F15
J421-37	I16	RU15	H12
J421-38	J16	RU30	H12
J421-39	I2	RU31	H12
J421-4	A2	RU33	F14
J421-40	J16	RU70	J9
J421-41	I2	XU01	I12
J421-8	A2		
J421-9	B2		
JM04-3	H2		
JM04-4	H2		
JM04-5	H2		
JU01-1	E2		
JU01-2	F2		
JU01-3	E2		
JU01-4	F2		
JU01-5	F2		
JU01-6	F2		

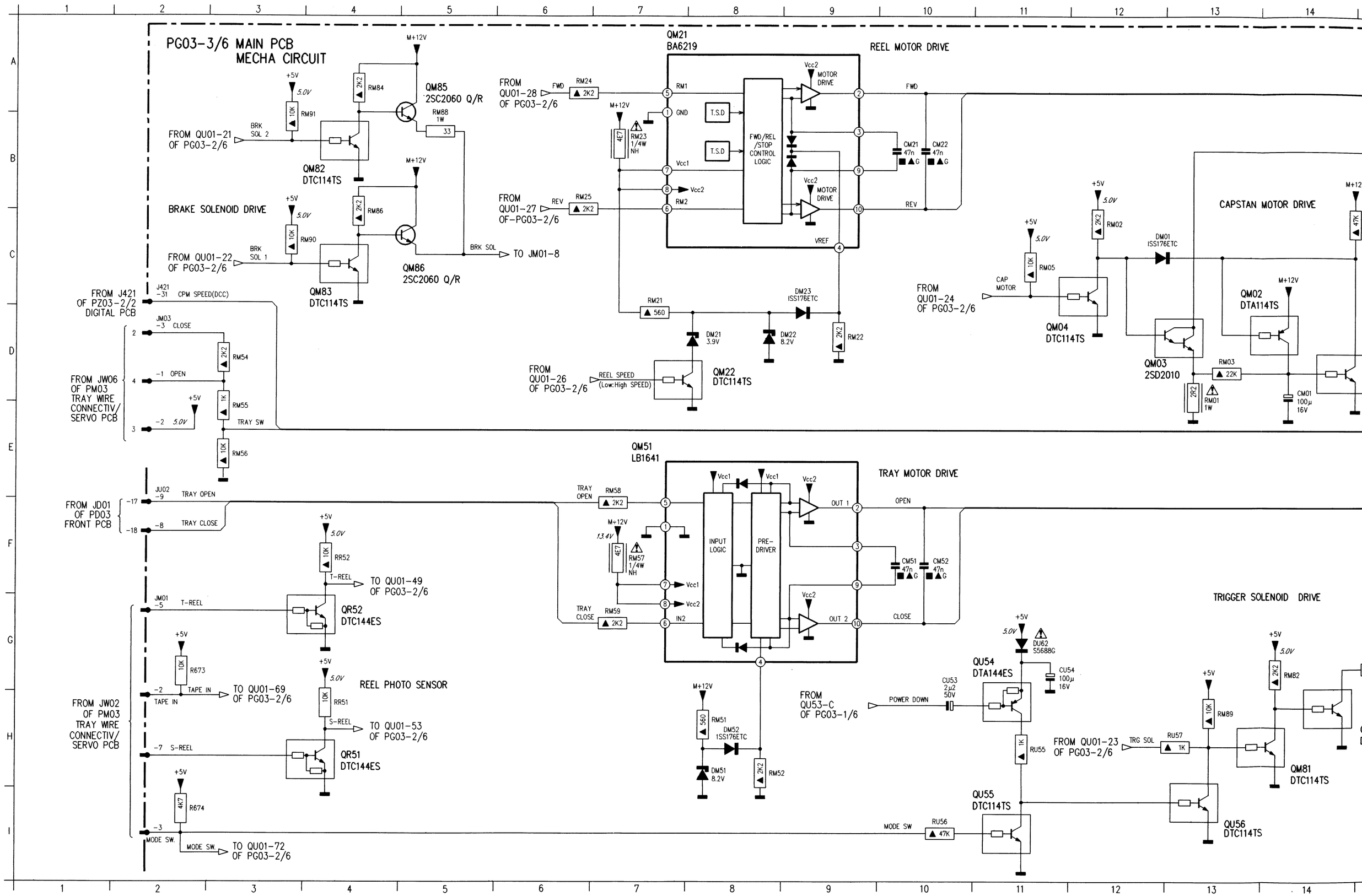
PG03-3/6 MAIN PCB
MECHA CIRCUIT
BRAKE SOLENOID DRIVE
REEL MOTOR DRIVE
CAPSTAN MOTOR DRIVE
TRAY MOTOR DRIVE
TRIGGER SOLENOID DRIVE
REEL PHOTO SENSOR
QM21
BA6219
QM51
LB1641
FWD/REL
/STOP
CONTROL
LOGIC
INPUT
LOGIC
PRE-
DRIVER
QM85
2SC2060 Q/R
QM86
2SC2060 Q/R
QM82
DTC114TS
QM83
DTC114TS
QM22
DTC114TS
QM04
DTC114TS
QM03
2SD2010
QM02
DTA114TS
QR52
DTC144ES
QR51
DTC144ES
QU54
DTA144ES
QU55
DTC114TS
QU56
DTC114TS
QM81
DTC114TS
FROM QU01-21
OF PG03-2/6
FROM QU01-22
OF PG03-2/6
FROM QU01-28
OF PG03-2/6
FROM QU01-27
OF-PG03-2/6
FROM QU01-26
OF PG03-2/6
FROM QU01-24
OF PG03-2/6
FROM QU01-23
OF PG03-2/6
FROM QU53-C
OF PG03-1/6
FROM J421
OF PZ03-2/2
DIGITAL PCB
FROM JW06
OF PM03
TRAY WIRE
CONNECTIV/
SERVO PCB
FROM JD01
OF PD03
FRONT PCB
FROM JW02
OF PM03
TRAY WIRE
CONNECTIV/
SERVO PCB
TO JM01-8
TO QU01-49
OF PG03-2/6
TO QU01-69
OF PG03-2/6
TO QU01-53
OF PG03-2/6
TO QU01-72
OF PG03-2/6
CPM SPEED(DCC)
CLOSE
OPEN
TRAY SW
TRAY OPEN
TRAY CLOSE
T-REEL
TAPE IN
S-REEL
MODE SW.
REEL SPEED
(Low:High SPEED)
CAP
MOTOR
POWER DOWN
TRG SOL
MOTOR
DRIVE
VREF
OUT 1
OUT 2
IN2
M+12V
+5V
5.0V
13.4V
DM01
ISS176ETC
DM23
ISS176ETC
DM21
3.9V
DM22
8.2V
DM52
1SS176ETC
DM51
8.2V
DU62
S5688G
CU54
100μ
16V
CM01
100μ
16V
CM21
47n
CM22
47n
CM51
47n
CM52
47n
RM01
1W
RM02
RM03
RM05
RM21
RM22
RM23
1/4W
NH
RM24
RM25
RM51
RM52
RM54
RM55
RM56
RM57
RM58
RM59
RM82
RM84
RM86
RM88
1W
RM89
RM90
RM91
RR51
RR52
R673
R674
RU55
RU56
RU57
CU53
2μ2
50V

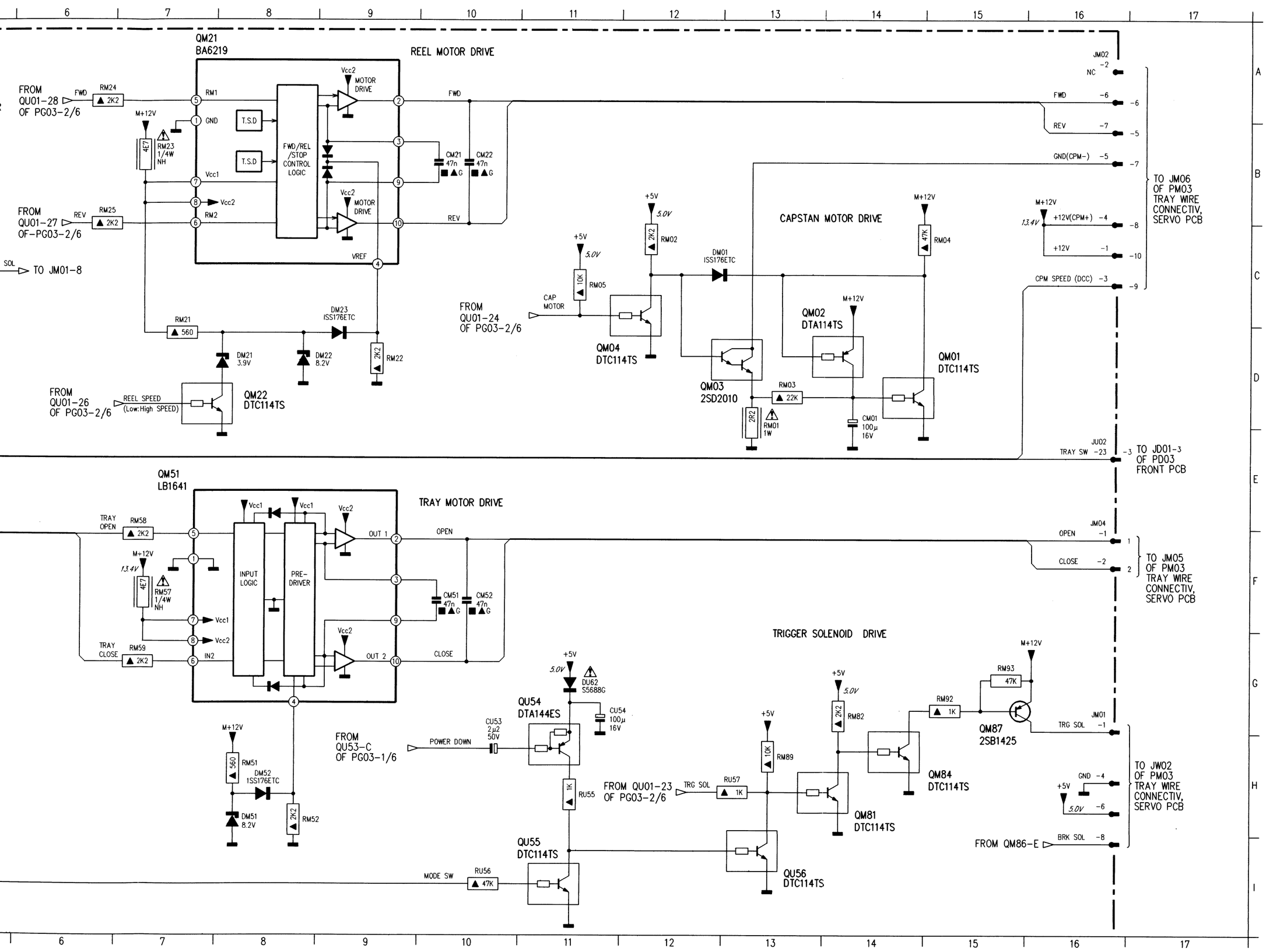

CM01	D14
CM21	B10
CM22	B10
CM51	F10
CM52	F10
CU53	H10
CU54	G11
DM01	C12
DM21	D8
DM22	D8
DM23	D9
DM51	H8
DM52	H8
DU62	G11
J421-2	E2
J421-31	C2
JM01-1	G16
JM01-2	H2
JM01-3	I2
JM01-4	H16
JM01-5	G2
JM01-6	H16
JM01-7	H2
JM01-8	I16
JM02-1	C16
JM02-2	A16
JM02-3	C16
JM02-4	B16
JM02-5	B16
JM02-6	A16
JM02-7	B16
JM03-1	D2
JM03-3	D2
JM04-1	F16
JM04-2	F16
JU02-23	E16
JU02-8	F2
JU02-9	F2
QM01	D14
QM02	D14
QM03	D13
QM04	C12
QM21	A8
QM22	D8
QM51	E8
QM81	H14
QM82	B4
QM83	C4
QM84	H14
QM85	A5
QM86	C5
QM87	G15
QR51	H4
QR52	G4
QU54	H11
QU55	I11
QU56	I13
R673	G2
R674	I2
RM01	D13
RM02	C12
RM03	D13
RM04	C14
RM05	C11
RM21	D7
RM22	D9
RM23	B7
RM24	A6
RM25	B6
RM51	H8
RM52	H8
RM54	D3
RM55	D3
RM56	D3
RM57	F7
RM58	F7
RM59	G7
RM82	G14
RM84	A4
RM86	B4
RM88	B5
RM89	H13
RM90	C3
RM91	B3
RM92	G15
RM93	G15
RR51	H4
RR52	F4
RU55	H11
RU56	I10
RU57	H13

PG03-4/6 MAIN PCB
ANALOG IN,DIGITAL IN/OUT CIRCUIT

JA03 COAX IN
CHASSIS
CA17 100n 50V
L715
CA07 100P
RA04 150
RA05 150
DIGITAL GND -6
COAXIAL -7
J421 -4 -3
TO J421 OF PZ03-1/2 DIGITAL PCB

(RC-5 EASYLINK SELECT) IR SENSOR
FROM JD01 OF PD01 FRONT PCB -10 -9 -24
FROM J421-5 OF PZ03-1/2 DIGITAL PCB
J421 -5

JA02 RX176
OPTICAL IN
CA19 100n 50V
RA17 33K
QA04 2SC536 SP/ETC
CA12 100n 50V
LA03 47µH
RA15 39 1/4W
RA14 270
SR01 ON (INT) OFF (EXT)
JU02 -16 -17 -2
TO RR07
TO QU21-9
RU23 10K
RC-5/EASY. SELECT
QU22 DTC114ES

CHASSIS
JR01 IN
ESI BUS (EASYLINK)
OUT
CR06 100n 50V
L721
RR02 10
L719
CR03 100n 50V
CR04 100P
CHASSIS

FROM QU52-C OF PG03-1/6
POWER DOWN
QU57 DTC114TS
RR06 47K
CR01 10µ 16V
RR05 47K
FROM JU02-16
EASYLINK OUT
RR07 47K
QR01 2SA608 SP/ETC
DR01 1SS176 ETC
RR03 47K
QR02 2SC536 SP/ETC
RR04 18K
+5V 5.0V
CR02 22n 50V
RR01 100 1/4W

QU21-3/4 74HC125
QU21-4/4 74HC125
FROM JU02-2
IR SENSOR
REMOTE IN
CU21 47µ 16V
CU22 100n 50V

FROM QU17-E OF PG03-5/6
QA03 2SA608 SP/ETC
RA08 100K
FROM QU01-63 OF PG03-2/6
CA09 22µ 50V
QA02 DTC114ES
TX
RA10 220

QA01-1/6 74HCU04
QA01-2/6 74HCU04
QA01-3/6 74HCU04
QA01-4/6 74HCU04
QA01-5/6 74HCU04
QA01-6/6 74HCU04
CA03 0.1µ 50V
RA02 680
CA14 56P
LA01
RA01 390
CA08 0.1µ 50V
RA13 1/4W 39
LA02 10µH
CA06 22µ 50V
CA01 10µ 16V
CA02 47n

+12V 11.9V
R751 1/4W NF
Q751-1/2 NJM2068DD
C757 220µ 16V
C753 4µ7 50V
L717
R755 1K
R753 47K
C751 100P
R759 100
L-CH
REC IN
R-CH
C754 4µ7 50V
L718
R756 1K
R754 47K
C752 100P
R758 100
Q751-2/2 NJM2068DD
R752 1/4W NF
C756 220µ 16V
-12V -12.0V
CHASSIS

PV03 REC/BALANCE VOLUME
J701 WV01 JV02
RV03 1K
CV01 10µ 16V
RV02 BALANCE VOLUME 100K
RV01 REC.VOLUME 50K
RV04 1K
CV02 10µ 16V
JV01 WV02 J702
2 L-CH
GND
2 R-CH

+12V 12.0V
R705 1/4W NF
D701 S5688G
L701 SZ2103
FROM Q601-25 (C603) OF PG03-5/6
DOLBY-L
R701 12K
DCC
R703 1K5
ACC
L701 L-CH

Q701 2SD2159 U/V
FROM Q601-6 (C604) OF PG03-5/6
DOLBY-R
R702 12K
R704 1K5
R706 2K2
R707 2K2
ADC INPUT SELECT
DCC/ACC
FROM QU01-64 OF PG03-2/6
Q702 DTC114TS

OF PG03-2/6 +5V
OF PG03-1/6

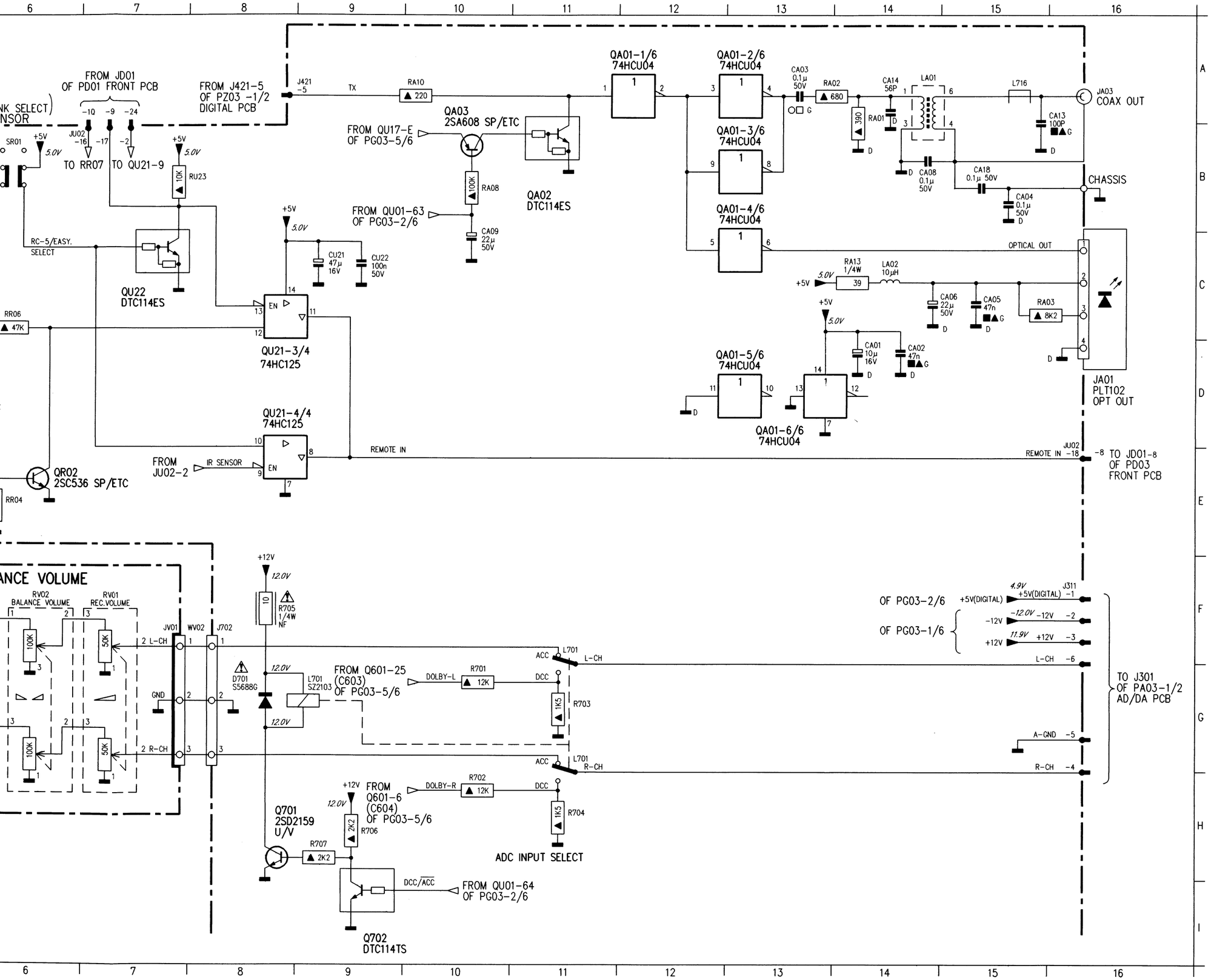

C751	F1	J742	F1	QU21-4/4	E8
C752	G1	JA01-1	C16	QU22	C7
C753	F2	JA01-2	C16	QU57	C4
C754	G2	JA01-3	C16	R701	G10
C756	H4	JA01-4	D16	R702	H10
C757	F4	JA02-1	C1	R703	G11
CA01	D14	JA02-2	C1	R704	H11
CA02	D14	JA02-3	B1	R705	F8
CA03	A13	JA02-4	B1	R706	H9
CA04	B15	JA03	A1	R707	H9
CA05	C15	JA03	A16	R751	E3
CA06	C14	JR01	D1	R752	H3
CA07	A2	JU02-16	B7	R753	F2
CA08	B14	JU02-17	B7	R754	G2
CA09	C10	JU02-18	E16	R755	F3
CA12	B2	JU02-2	B7	R756	G3
CA13	B15	JV01	F7	R758	G3
CA14	A14	JV02	F5	R759	F3
CA17	A1	L701	G11	RA01	A14
CA18	B15	L701	G9	RA02	A13
CA19	C2	L715	A2	RA03	C15
CR01	D5	L716	A15	RA04	A2
CR02	C5	L717	F2	RA05	A3
CR03	E1	L718	G2	RA08	B10
CR04	E3	L719	E2	RA10	A10
CR06	D1	L721	D2	RA13	C14
CU21	C9	LA01	A14	RA14	B3
CU22	C9	LA02	C14	RA15	B3
CV01	F6	LA03	B3	RA17	C2
CV02	G6	Q701	H8	RR01	C5
D701	G8	Q702	I9	RR02	D2
DR01	E5	Q751-1/2	F3	RR03	E5
J311-1	F16	Q751-2/2	G3	RR04	E6
J311-2	F16	QA01-1/6	A12	RR05	D5
J311-3	F16	QA01-2/6	A13	RR06	C6
J311-4	G16	QA01-3/6	B13	RR07	D4
J311-5	G16	QA01-4/6	C13	RU23	B7
J311-6	F16	QA01-5/6	D13	RV01	F7
J421-3	A4	QA01-6/6	D13	RV02	F6
J421-4	A4	QA02	B11	RV03	F5
J421-5	A8	QA03	B10	RV04	G5
J421-6	A4	QA04	C3	SR01	B6
J421-7	A4	QR01	D5	WV01	F4
J701	F4	QR02	E6	WV02	F8
J702	F8	QU21-3/4	C8		

REC/BALANCE VOLUME PCB (PV03)

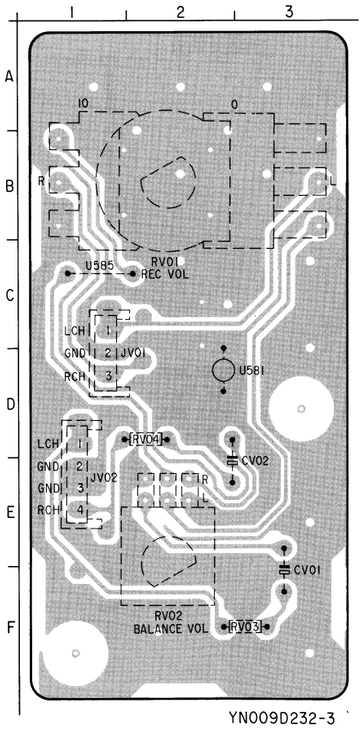

CV01	F3
CV02	E2
JV01	D1
JV02	E1
RV01	C2
RV02	F2
RV03	F2
RV04	D2
U581	D2
U585	C1

YN009D232-3

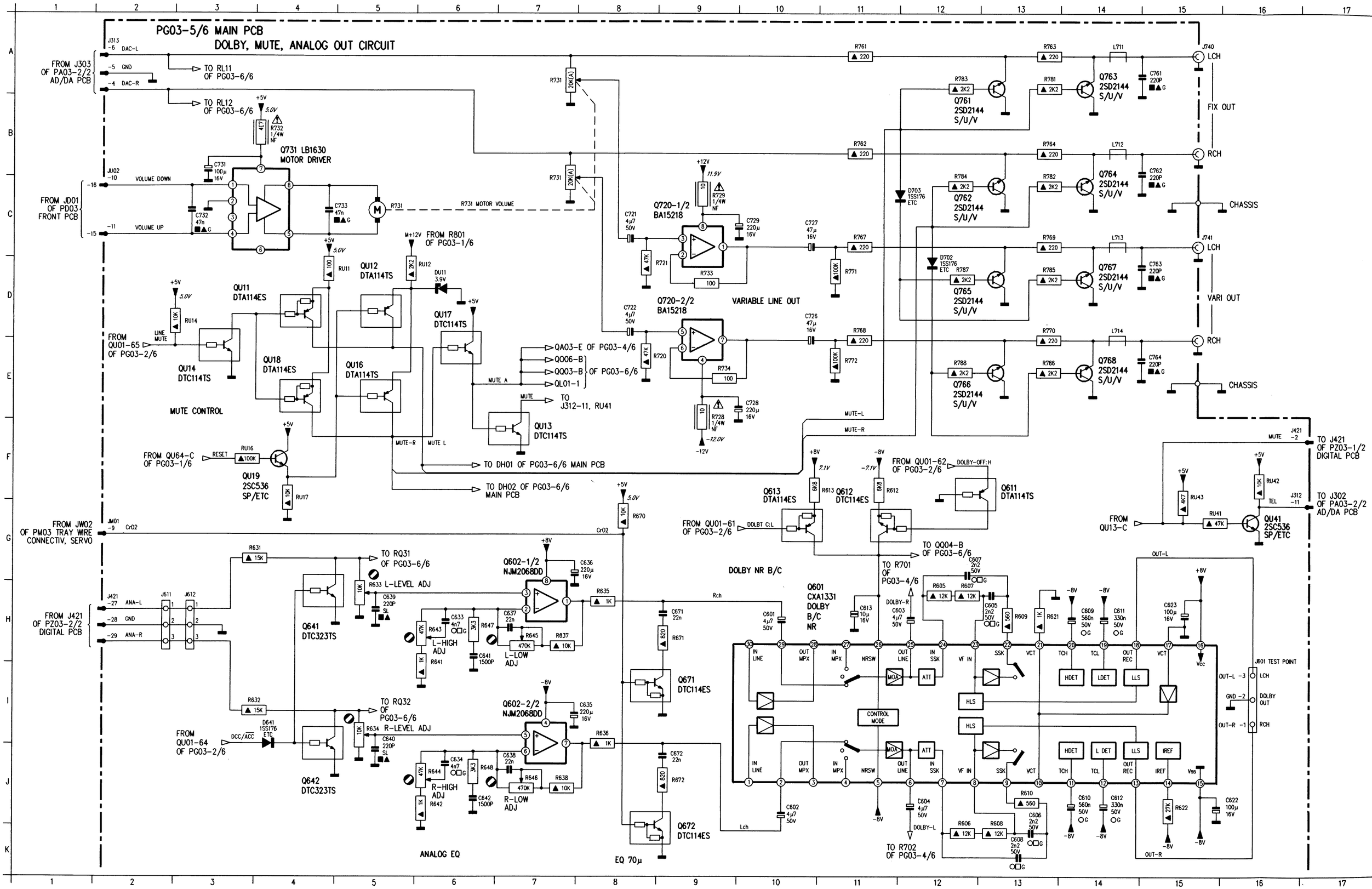
PG03-5/6 MAIN PCB
DOLBY, MUTE, ANALOG OUT CIRCUIT
FROM J303 OF PA03-2/2 AD/DA PCB
TO RL11 OF PG03-6/6
TO RL12 OF PG03-6/6
Q731 LB1630 MOTOR DRIVER
FROM JD01 OF PD03 FRONT PCB
VOLUME DOWN
VOLUME UP
R731 MOTOR VOLUME
FROM R801 OF PG03-1/6
QU11 DTA114ES
QU12 DTA114TS
QU17 DTC114TS
QU14 DTC114TS
QU18 DTA114ES
QU16 DTA114TS
FROM QU01-65 OF PG03-2/6
LINE MUTE
MUTE CONTROL
QA03-E OF PG03-4/6
QQ06-B
QQ03-B
QL01-1
OF PG03-6/6
TO J312-11, RU41
QU13 DTC114TS
FROM QU64-C OF PG03-1/6
RESET
QU19 2SC536 SP/ETC
TO DH01 OF PG03-6/6 MAIN PCB
TO DH02 OF PG03-6/6 MAIN PCB
FROM JW02 OF PM03 TRAY WIRE CONNECTIV, SERVO
FROM J421 OF PZ03-2/2 DIGITAL PCB
ANA-L
GND
ANA-R
TO RQ31 OF PG03-6/6
L-LEVEL ADJ
Q641 DTC323TS
Q602-1/2 NJM2068DD
L-HIGH ADJ
L-LOW ADJ
TO RQ32 OF PG03-6/6
R-LEVEL ADJ
FROM QU01-64 OF PG03-2/6
DCC/ACC
Q642 DTC323TS
Q602-2/2 NJM2068DD
R-HIGH ADJ
R-LOW ADJ
ANALOG EQ
Q671 DTC114ES
Q672 DTC114ES
EQ 70μ
Q720-1/2 BA15218
Q720-2/2 BA15218
VARIABLE LINE OUT
Q761 2SD2144 S/U/V
Q762 2SD2144 S/U/V
Q765 2SD2144 S/U/V
Q766 2SD2144 S/U/V
Q763 2SD2144 S/U/V
Q764 2SD2144 S/U/V
Q767 2SD2144 S/U/V
Q768 2SD2144 S/U/V
LCH
RCH
FIX OUT
CHASSIS
VARI OUT
Q613 DTA114ES
Q612 DTC114ES
Q611 DTA114TS
FROM QU01-61 OF PG03-2/6
DOLBT C:L
FROM QU01-62 OF PG03-2/6
DOLBY-OFF:H
TO QQ04-B OF PG03-6/6
DOLBY NR B/C
Q601 CXA1331 DOLBY B/C NR
TO R701 OF PG03-4/6
TO R702 OF PG03-4/6
CONTROL MODE
HDET
LDET
LLS
IREF
J601 TEST POINT
DOLBY OUT
TO J421 OF PZ03-1/2 DIGITAL PCB
TO J302 OF PA03-2/2 AD/DA PCB
FROM QU13-C
QU41 2SC536 SP/ETC

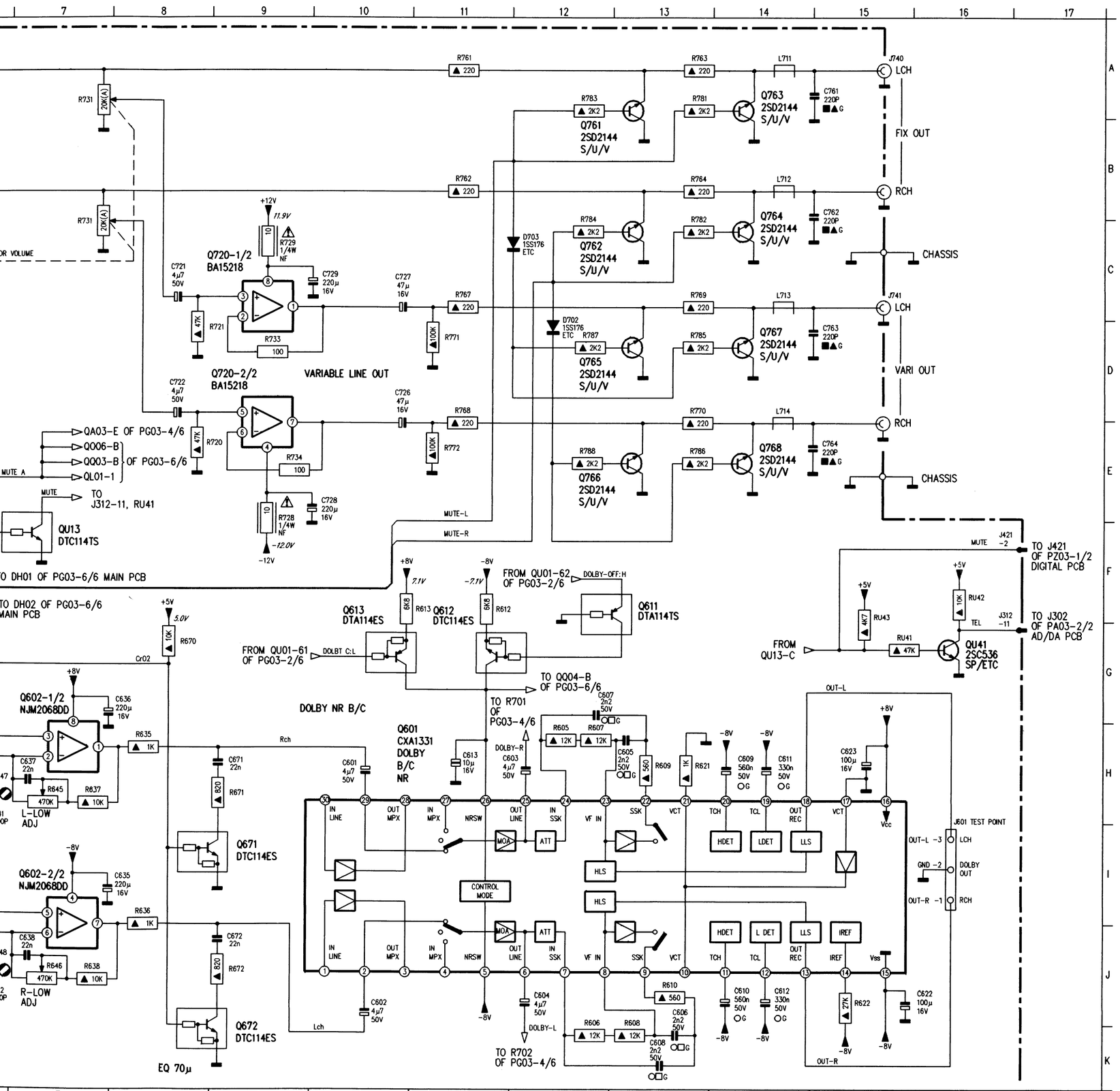

C601	H10	R605	H12
C602	J10	R606	K12
C603	H12	R607	H12
C604	J12	R608	K13
C605	H13	R609	H13
C606	K13	R610	J13
C607	G12	R612	F11
C608	K13	R613	F10
C609	H14	R621	H13
C610	J14	R622	J15
C611	H14	R631	G3
C612	J14	R632	I3
C613	H11	R633	H5
C622	J15	R634	I5
C623	H15	R635	H8
C633	H6	R636	I8
C634	J6	R637	H7
C635	I7	R638	J7
C636	G7	R641	H6
C637	H7	R642	J6
C638	J7	R643	H6
C639	H5	R644	J6
C640	J5	R645	H7
C641	H6	R646	J7
C642	J6	R647	H6
C671	H9	R648	J6
C672	J9	R670	G8
C721	C8	R671	H9
C722	D8	R672	J9
C726	D10	R720	E8
C727	C10	R721	C8
C728	E9	R728	E9
C729	C9	R729	C9
C731	B3	R731	C5
C732	C3	R732	B4
C733	C4	R733	D9
C761	A15	R734	E9
C762	B15	R761	A11
C763	D15	R762	B11
C764	E15	R763	A13
D641	I4	R764	B13
D702	D12	R767	C11
D703	C12	R768	D11
DU11	D6	R769	C13
J312-11	G17	R770	D13
J313-4	A2	R771	D11
J313-5	A2	R772	E11
J313-6	A2	R781	A13
J421-2	F17	R782	C13
J421-27	H2	R783	A12
J421-28	H2	R784	C12
J421-29	H2	R785	D13
J601	I16	R786	E13
J611	H2	R787	D12
J612	H3	R788	E12
J740	A15	RU11	D4
J741	C15	RU12	D5
JM01-9	G2	RU14	D3
JU02-10	C2	RU16	F3
JU02-11	C2	RU17	F4
L711	A14	RU41	G15
L712	B14	RU42	F16
L713	C14	RU43	G15
L714	D14		
Q601	H10		
Q602-1/2	H7		
Q602-2/2	I7		
Q611	F12		
Q612	G11		
Q613	G10		
Q641	H4		
Q642	J4		
Q671	I8		
Q672	J8		
Q720-1/2	C9		
Q720-2/2	D9		
Q731	B4		
Q761	A13		
Q762	C13		
Q763	A14		
Q764	C14		
Q765	D13		
Q766	E13		
Q767	D14		
Q768	E14		
QU11	D4		
QU12	D5		
QU13	F7		
QU14	E3		
QU16	E5		
QU17	E6		
QU18	E4		
QU19	F4		
QU41	G16		

PG03-6/6 MAIN PCB
HEADPHONE, QMS CIRCUIT

FROM J313-6 OF PG03 -5/6
DAC L CH
RL11 100
CL01 10µ 16V
QL02-1/2 BA15218
+12V 12.0V
RL10 1/4W NF
RL07 47K

FROM J313-4 OF PG03-5/6
DAC R-CH
RL12 100
CL02 10µ 16V
QL02-2/2 BA15218
RL08 47K
RL09 1/4W NF -12.0V
-12V

QL01 BA6138
Vcc
RECT. AMP
1/2 POWER COMPRE -SSION
POWER REGU-LATOR
MUTING
OUTPUT STAGE
MUTE
DET2
GND
CL05 100µ 16V L
CL06 100µ 16V R
CL03 10µ 16V RL03 100K
CL04 10µ 16V RL04 100K
LEVEL METER
METER-L ADJ RL05 2K2 METER-L RL01 4.7K
METER-R ADJ RL06 2K2 METER-R RL02 4.7K
FROM QU17-E OF PG03- /6 MUTE A

JH04-1/2
L OUT -2
GND -3
R OUT -1

PH03-1/2 HEADPHONE PCB
WH01-1/2
-2 L IN
-3 GND
-1 R IN
WH01-2/2
L OUT -4
R OUT -5
RH01 HEADPHONE VOLUME 20K(A)

METER-L JU02 -25 -1
METER-R -24 -2
TO JD01 OF PD03 FRONT PCB

JH04-2/2
-4 L IN
-5 R IN
RH29 10K
RH30 10K
CH03 4µ7 50V
CH04 4µ7 50V
RH05 47K
RH06 47K

QH02-1/2 BA15218
RH11 120
RH09 22K
CH05 330µ 16V
RH13 10K
QH07 DTC323TS
QH05 DTC323TS
DH01 1SS176 ETC
FROM QU12-C OF PG03-5/6
RH07 10K
RH02 1/4W NF 12.0V
CH01 220µ 16V
+12V

HEADPHONE
QH02-2/2 BA15218
RH12 120
RH10 22K
CH06 330µ 16V
RH14 10K
QH08 DTC323TS
QH06 DTC323TS
DH02 1SS176 ETC
FROM QU16-C OF PG03-5/6
RH08 10K
RH04 1/4W NF -12.1V
CH02 220µ 16V
-12V

JH06
H.P. L CH -3
H.P R-CH -1
GND -2

PH03-2/2 HEADPHONE PCB
WH03
-3 L
-2 GND
-1 R
LH31
LH33
LH32
CH31 10n
CH33 100n
CH32 10n
L
R
G

QQ51-1/2 BA15218
RQ51 100K
CQ51 10µ 16V
RQ53 22K
RQ55 10K
RQ57 4K7
RQ59 1K
RQ61 1/4W NF -12.1V
CQ53 47µ 16V
-12V

QQ51-2/2 BA15218
RQ52 100K
CQ52 10µ 16V
RQ54 22K
RQ56 10K
RQ58 4K7
RQ60 1K
RQ62 1/4W NF 12.0V
CQ54 47µ 16V
+12V

CQ55 10µ 16V
RQ63 10K
RQ64 47K
FROM QU01-63 OF PG03-2/6 P.B/REC
QQ52 DTC114TS
-60dB LEVEL DETECT

FROM R631(J612-1) OF PG03-5/6 ANA-L
FROM R632(J612-3) OF PG03-5/6 ANA-R
RQ31 100K
RQ32 100K
RQ10 10K
CQ09 2n2 50V
RQ15 100K
CQ22 22n 50V
CQ21 100P
RQ23 1M
QQ21 2SC536 SP/ETC
RQ22 330
CQ10 22n
RQ21 8K2

QQ04 DTC114TS
RQ03 6K8
FROM Q612-C,Q613-C OF PG03-5/6 NRSW
QQ03 DTC114TS
RQ07 10K
FROM QU17-E OF PG03-5/6 MUTE A (SEARCH.H)
QQ06 DTC114TS
RQ06 10K
QQ05 DTC114TS
CQ02 0.47µ 50V

QQ01 BA335PK
QMS
TO QU01-1 OF PG03-2/6
AF AMP
COMPARATOR
RQ01 100K
CQ04 22n 50V
CQ01 0.22µ 50V
CQ06 2n2 50V
+12V 11.9V
RQ17 1W 150
CQ08 100µ 16V
QMS CIRCUIT

PH03-1/2
HEADPHONE
PCB

PH03-2/2
HEADPHONE PCB

LEVEL METER

METER-L ADJ

METER-R ADJ

HEADPHONE VOLUME 20K(A)

HEADPHONE

HEADPHONE JACK

CHASSIS

TO JD01 OF PD03 FRONT PCB

FROM QU12-C OF PG03-5/6

FROM QU16-C OF PG03-5/6

QH02-1/2 BA15218

QH02-2/2 BA15218

QH07 DTC323TS

QH05 DTC323TS

QH08 DTC323TS

QH06 DTC323TS

QQ01 BA335PK

AF AMP

COMPARATOR

QQ52 DTC114TS

QQ21 2SC536 SP/ETC

QQ04 DTC114TS

QQ03 DTC114TS

QQ05 DTC114TS

QQ06 DTC114TS

QMS CIRCUIT

FROM R631(J612-1) OF PG03-5/6

FROM R632(J612-3) OF PG03-5/6

FROM Q612-C,Q613-C OF PG03-5/6

FROM QU17-E OF PG03-5/6

TO QU01-1 OF PG03-2/6

CH01	C14	LH32	E17	RL04	E7
CH02	F14	LH33	D17	RL05	C7
CH03	B12	QH02-1/2	B13	RL06	D7
CH04	E12	QH02-2/2	E13	RL07	B3
CH05	B14	QH05	C15	RL08	F3
CH06	E14	QH06	F15	RL09	F3
CH31	C16	QH07	C12	RL10	A3
CH32	E16	QH08	F12	RL11	B2
CH33	D16	QL01	C5	RL12	F2
CL01	B3	QL02-1/2	B3	RQ01	H16
CL02	F3	QL02-2/2	F3	RQ03	I12
CL03	B7	QQ01	H14	RQ06	I13
CL04	E6	QQ03	J11	RQ07	J12
CL05	C5	QQ04	I11	RQ10	H11
CL06	D5	QQ05	J14	RQ15	H12
CQ01	I14	QQ06	J13	RQ17	I16
CQ02	I14	QQ21	H13	RQ21	H13
CQ04	H16	QQ51-1/2	G5	RQ22	H13
CQ06	I15	QQ51-2/2	J5	RQ23	H13
CQ08	I16	QQ52	H8	RQ31	H10
CQ09	H11	RH01	B10	RQ32	H10
CQ10	H13	RH02	C13	RQ51	G4
CQ21	G13	RH04	F13	RQ52	I4
CQ22	H12	RH05	B12	RQ53	H4
CQ51	G4	RH06	E12	RQ54	J4
CQ52	J4	RH07	C13	RQ55	G6
CQ53	H6	RH08	F13	RQ56	J6
CQ54	J6	RH09	C13	RQ57	H5
CQ55	G7	RH10	F13	RQ58	K5
DH01	C12	RH11	B14	RQ59	H5
DH02	F12	RH12	E14	RQ60	K5
JH02	B18	RH13	C14	RQ61	H5
JH04	B9	RH14	E14	RQ62	I5
JH06	B15	RH29	B12	RQ63	G7
JH06	D15	RH30	E11	RQ64	G9
JU02-24	F9	RL01	C8	WH01	B10
JU02-25	F9	RL02	D8	WH03	B16
LH31	B17	RL03	B7	WH03	D16

HEADPHONE PCB (PH03)

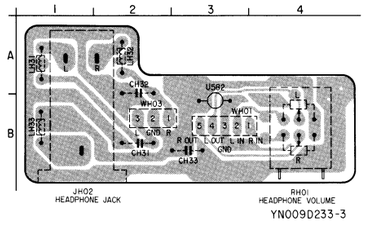

CH31	B2
CH32	A2
CH33	B3
JH02	B1
LH31	A1
LH32	A2
LH33	B1
RH01	B4
U582	B3
WH01	B3
WH03	B2

PZ03-1/2 DIGITAL PCB

FROM J421 OF PG03 MAIN PCB
-2/6 J421-25 +5V → L441 100µH → +5VD
C449 100n 16V C
C450 10µ 16V C
-2/6 -12 RESET
-2/6 -21 D-GND D
-2/6 -4 D-GND D
-5/6 -2 MUTE → TO Q412-3/4 OF PZ03-2/2 DIGITAL PCB
R447 100K C
-4/6 -6 D-GND D

FROM J421-44(J312-5) OF PA03-1/2(PG03) -44 AD-SDA

FROM J421 OF PG03 MAIN PCB
-4/6 -7 COAXIAL → R457 330 C, C443 100n 16V C, C457 150P C, R441 10K C
-4/6 -3 OPTICAL
OF PZ03-2/2 DIGITAL PCB: (R) FROM Q403-22 SYNC-DAI 4, (H) FROM Q404-8 SET SY 5 → Q412-2/4 TC74HC32AP OR ≥1 → 6
-2/6 -40 U SYNC1
-2/6 -13 LT DAI → R493 4K7 C

FROM J421 OF PG03 MAIN PCB
-2/6 -13 LT DAI
-2/6 -40 U SYNC1
-4/6 -3 OPTICAL
-4/6 -7 COAXIAL
-4/6 -6 D-GND D
-5/6 -2 MUTE
-2/6 -21 D-GND D
-2/6 -12 RESET
-2/6 -25 +5V

Q441 M51581FP DAI

AUDIO INTERFACE / SELECTION: ASL, FLAG1, MUTE, SDO, ADSEL, ADSDI, RX1, NFR, OPTICAL RX2, RXSEL, SETSY, USYNC-1, LT-EN, LT-CNT0, LT-CNT1, LT-DATA, LT-CLK
LEVEL CONVER-SION / SELECT
NON AUDIO INTERFACE

FLAG0, CK SEL, LRCK POL, WCK, IIS, MSBF, RESET
SD/SDI, WS/LRCK, SCK/BCK, MSTCK, RXCKO, UNLOCK, TX, IRQU, IMSTRT, USYNC O, MODE0, MODE1, CKACO, REFCK

TIMING GENERATOR
T(TIMING)
DEMO. PREAMBLE DET.
LOCK DET.
PREAMBLE GEN. MODULATION
FRAME COMPOSITION DECOMOSITION
CRC GEN. & CHECK
CLOCK FREQUENCY CHECK
SYSTEM CONTROL
PHASE DETECTOR
1/2
INVERTER
PD1, PD2, Vdd, Vss, RXCK I

SDA → R456 1K
SWS
SCL
TO J421
UNLOCK → -1
TX → -5
IRQU → -9
IMSTRT → -10
USYNC O → -41
MODE0, MODE1 → SYSTEM CONTROL
CKACO → -42
REFCK → -28

Q442-3/4 TC74HC04AF INVERTER

13 → 1 → 12

Q442-2/4 TC74HC04AF INVERTER

11 → 1 → 10

Q442-1/4 74HC04AF INVERTER

9 → 1 → 8

Q442-4/4 TC74HC04AF INVERTER

14 → 1 → 7

Q443 NE5230

Vdd, Vss
R443 2K2 C, R444 2K2 C, C444 100n 16V C, C441 39n C, R442 10K C
+5V R448 22K C, R449 22K C, C445 100n 16V C, C447 10µ 16V C

Q444 74HC4046 PLL

Vcc
VOLTAGE CONTRO-LLED OSC (VCO)
VCO IN, VCO OUT, R1, R2, C1A, C1B
SIGN IN, SELF BIAS CIRCUIT
SOURCE FOLLOWER, SF OUT
INH
PHASE COMPARATOR 1, PC1 OUT
COMP
PHASE COMPARATOR 2, PC2 OUT, PCP OUT
ZENER
Vss

R450 10K C, R451 30K C, R452 30K C
R453 4K7 C, R454 6K8 C, R455 10K C VCO ADJ
C448 100P C

R445 1K2 C, C442 470n C, J441 T.P
VCO. FREE RUN 7.5MHz ± 0.1MHz J442

Q412-1/4 TC74HC32AP OR

+5V, Vcc 14, ≥1, GND 7
C412 100n 16V

R481 33 C 256FS → (N) TO Q403-38 OF PZ03-2/2 DIGITAL PCB

R487 33 C

FROM J421-34 LT-CLK

R411 2K2 C +5V
R496 4K7 C
Q411 C UN2217

FROM J421
-38 LT CNT1
-37 LT CNT0
-36 LT ENA
-32 LT DATA
LT CLK
→ LT INTERFACE

FROM R480 OF PZ03-2/2 DIGITAL PCB (L)
CLK24
256FS
F DAF

R413 C +5V
RESOLO, NODONL, RESOL1
ALLOCATION AND SCALING CALCULATION

FDIR, FRESET, FSYNC
F DIR, F RESET, F SYNC
M1, M0
CONTROL

(P) TO Q403-6 Q404-65 OF PZ03-2/2 DIGITAL PCB
RESET
PWRDOWN, SCL, SWS

Q410 SAA2011 ADAS

Vdd, N.C

(M) FROM PZ03-2/2
(A) TO J421-48,-50
(B) TO PZ03-2/2

Q401 SAA2001 SBF LEFT

C401 100n 16V C
+5V, Vdd, Vdd, N.C
FSYNC, SDA, SWS, SCL, 256FS, F-RESET, F-DIR, TEST0, TEST1, Vss, Vss
INTERFACE, INTERFACE, FDA
DATA & CONTROL
CONTROLLER
PROCESSOR RAM-ROM
MODE1, MODE0, MODE2
FRESET, FDIR

Q402 SAA2001 SBF RIGHT

C402 100n 16V C
+5V, Vdd, Vdd, N.C
FSYNC, SDA, SWS, SCL, 256FS, F-RESET, F-DIR, TEST0, TEST1, Vss, Vss
INTERFACE, INTERFACE, FDA
DATA & CONTROL
CONTROLLER
PROCESSOR RAM-ROM
MODE1, MODE0, MODE2
FRESET, FDIR

(J) (K) TO PZ03-2/2

FROM J421 OF PG03-2/6 MAIN PCB
J421 -34 LT- CLK
-32 LT- DATA
-38 LT- CNT1
-37 LT- CNT0
-36 LT- ADAS → TO Q410-3

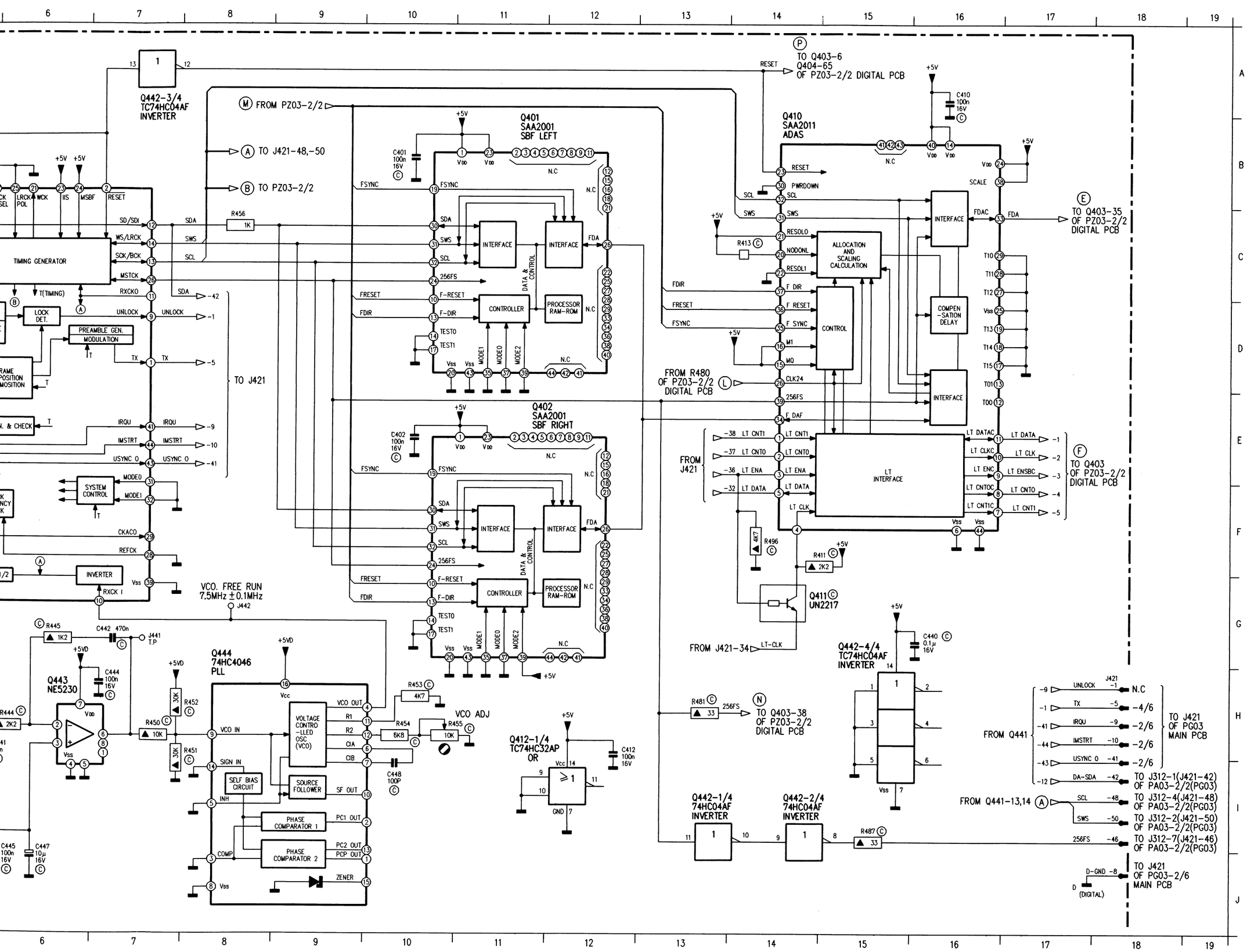

C401	B10
C402	E10
C410	A16
C412	H12
C440	G16
C441	H5
C442	G7
C443	D3
C444	H7
C445	J5
C446	G4
C447	J6
C448	I10
C449	A2
C450	A3
C457	D2
J421-1	H18
J421-10	H18
J421-12	B2
J421-13	E2
J421-2	C2
J421-21	B2
J421-25	A2
J421-3	D2
J421-32	H2
J421-34	H2
J421-36	H2
J421-37	H2
J421-38	H2
J421-4	B2
J421-40	E2
J421-41	H18
J421-42	I18
J421-44	C2
J421-46	I18
J421-48	I18
J421-5	H18
J421-50	I18
J421-6	C2
J421-7	D2
J421-8	J18
J421-9	H18
Q401	B11
Q402	E11
Q410	B14
Q411	G14
Q412-1/4	I12
Q412-2/4	E4
Q441	B4
Q442-1/4	I13
Q442-2/4	I14
Q442-3/4	A7
Q442-4/4	H15
Q443	H6
Q444	H8
R411	F14
R413	C14
R441	D4
R442	H5
R443	H5
R444	H6
R445	G6
R447	C3
R448	I5
R449	J5
R450	H7
R451	H7
R452	H7
R453	H10
R454	H10
R455	H10
R456	C8
R457	D3
R481	H13
R487	I15
R493	F2
R496	F14

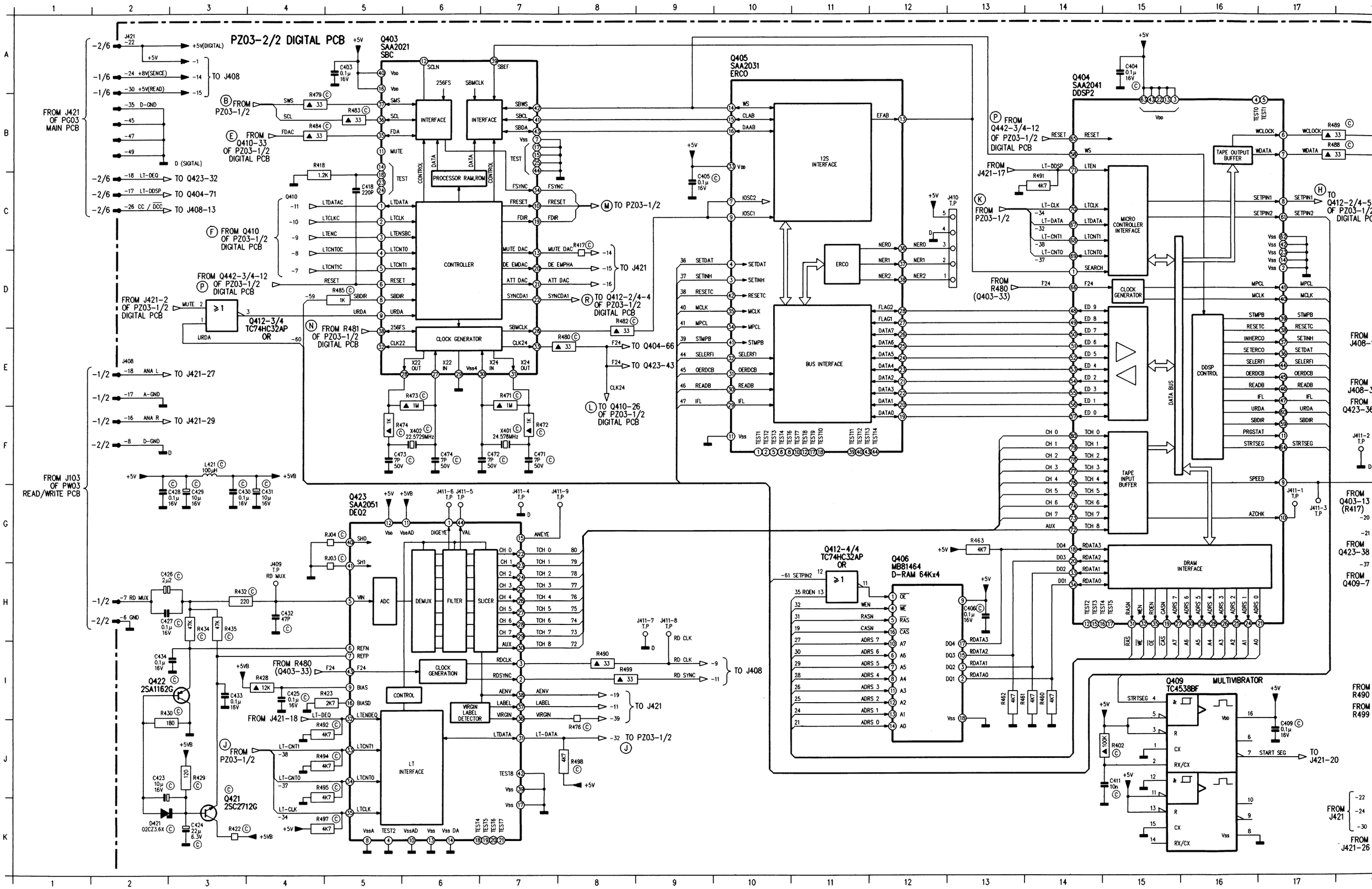
PZ03-2/2 DIGITAL PCB
Q403 SAA2021 SBC
Q405 SAA2031 ERCO
Q404 SAA2041 DDSP2
Q423 SAA2051 DEQ2
Q406 MB81464 D-RAM 64Kx4
Q409 TC4538BF MULTIVIBRATOR
Q412-3/4 TC74HC32AP OR
Q412-4/4 TC74HC32AP OR
Q422 2SA1162G
Q421 2SC2712G
FROM J421 OF PG03 MAIN PCB
FROM J103 OF PW03 READ/WRITE PCB
INTERFACE
PROCESSOR RAM,ROM
CONTROLLER
CLOCK GENERATOR
12S INTERFACE
ERCO
BUS INTERFACE
MICRO CONTROLLER INTERFACE
TAPE OUTPUT BUFFER
DDSP CONTROL
TAPE INPUT BUFFER
DRAM INTERFACE
DATA BUS
ADC
DEMUX
FILTER
SLICER
CLOCK GENERATION
CONTROL
VIRGIN LABEL DETECTOR
LT INTERFACE
TO J408
TO J421
TO PZ03-1/2
TO Q404-66
TO Q423-43
TO Q412-2/4-4 OF PZ03-1/2 DIGITAL PCB
TO Q410-26 OF PZ03-1/2 DIGITAL PCB
FROM Q442-3/4-12 OF PZ03-1/2 DIGITAL PCB
FROM R481 OF PZ03-1/2 DIGITAL PCB
FROM Q410 OF PZ03-1/2 DIGITAL PCB
FROM J421-2 OF PZ03-1/2 DIGITAL PCB
FROM R480 (Q403-33)
FROM J421-18
FROM J421-17
FROM J421-20
FROM J421-26
FROM Q403-13 (R417)
FROM Q423-38
FROM Q409-7
FROM J408-3
FROM Q423-36
FROM R490
FROM R499

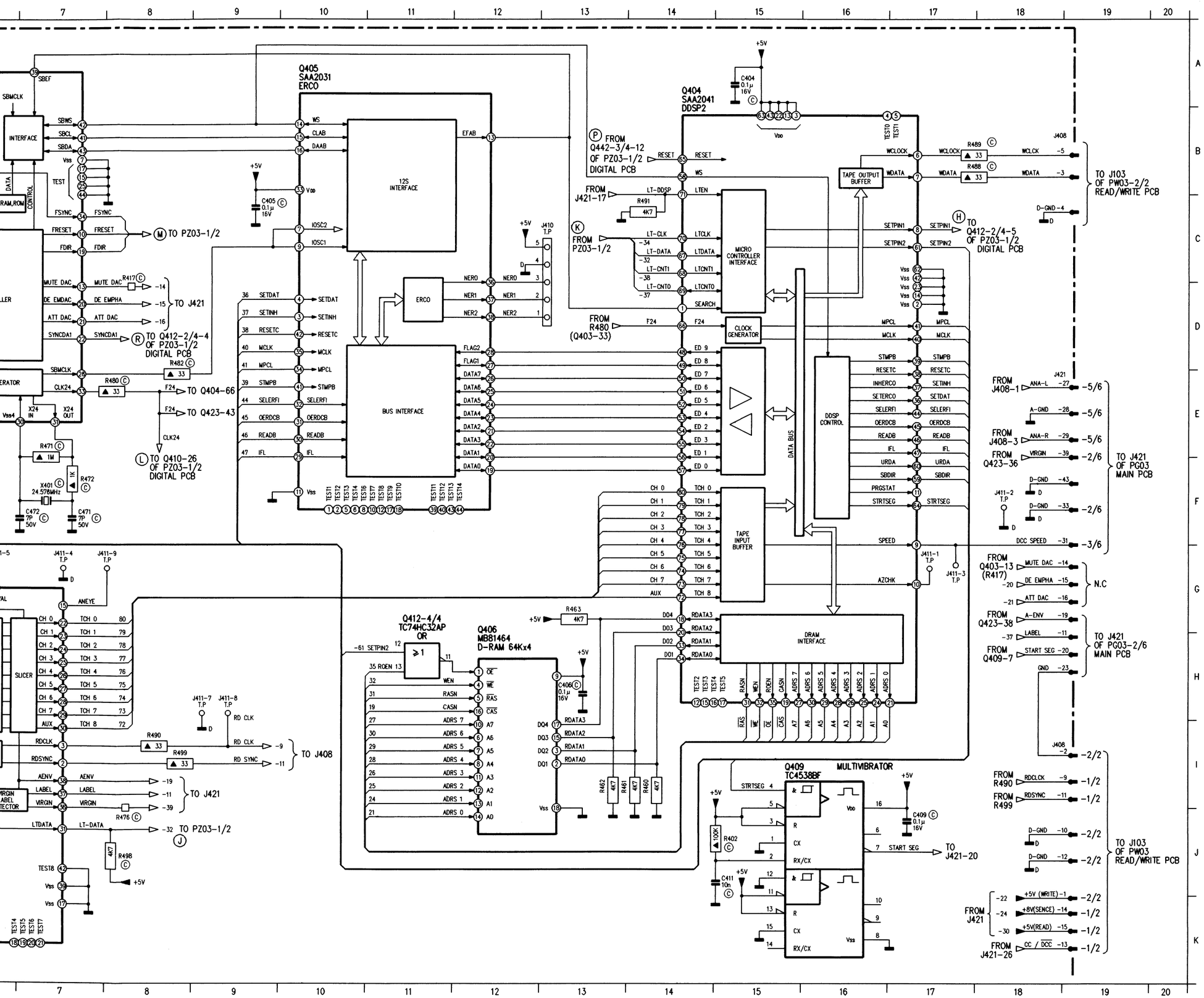

C403	A5	J421-31	F19
C404	A15	J421-33	F19
C405	C9	J421-35	B2
C406	H13	J421-39	E19
C409	J17	J421-43	F19
C411	J15	J421-45	B2
C418	C5	J421-47	B2
C423	J2	J421-49	B2
C424	K3	J421-8	F2
C425	I4	L421	F3
C426	H2	Q403	A5
C427	H2	Q404	B14
C428	G2	Q405	A10
C429	G3	Q406	H12
C430	G3	Q409	I16
C431	G4	Q412-3/4	D3
C432	H4	Q412-4/4	H11
C433	I3	Q421	K3
C434	I3	Q422	I3
C471	F7	Q423	G5
C472	F7	R402	J15
C473	F5	R417	D8
C474	F6	R418	C4
D421	K2	R422	K3
J408-1	K19	R423	I5
J408-10	J19	R428	I4
J408-13	K19	R429	J3
J408-14	K19	R432	H3
J408-15	K19	R434	H3
J408-17	E2	R435	H3
J408-18	E2	R460	I14
J408-2	I19	R461	I14
J408-3	B19	R462	I13
J408-4	C19	R463	G13
J408-5	B19	R471	E7
J408-6	H2	R472	F7
J408-7	H2	R473	E6
J408-9	I19	R474	F5
J409	H4	R476	I8
J409-11	I19	R479	B4
J409-12	J19	R480	E8
J410	C13	R482	E8
J411-1	G17	R483	B5
J411-2	F18	R484	B4
J411-3	G17	R485	D5
J411-4	G7	R488	B17
J411-5	G6	R489	B17
J411-6	G6	R490	I8
J411-7	H9	R491	C14
J411-8	H9	R492	J4
J411-9	G8	R494	J4
J421-11	H19	R495	J4
J421-14	G19	R497	K4
J421-15	G19	R498	J8
J421-16	F2	R499	I8
J421-16	G19	RJ03	H5
J421-17	C2	RJ04	G5
J421-18	C2	X401	F7
J421-19	G19	X402	F6
J421-20	H19		
J421-22	A2		
J421-23	H19		
J421-24	A2		
J421-26	C2		
J421-27	E19		
J421-28	E19		
J421-29	E19		
J421-30	A2		

READ WRITE PCB A SIDE (PW03)

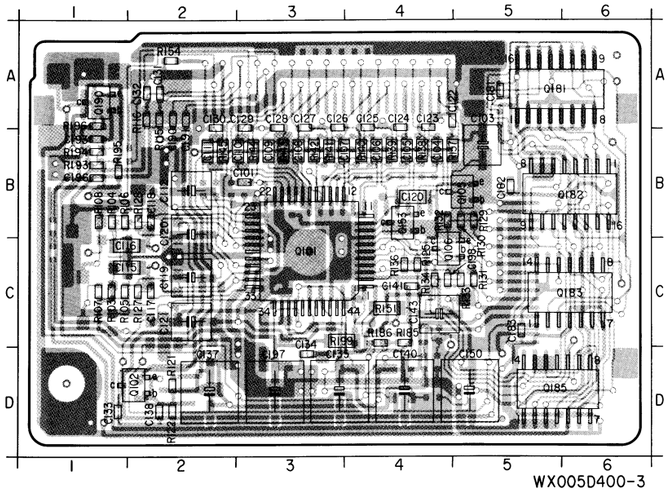

C101	B3	Q101	C3
C103	B5	Q102	D2
C104	B4	Q105	B5
C105	B4	Q106	C4
C106	B4	Q153	B4
C107	B3	Q181	A5
C108	B3	Q182	B6
C109	B3	Q183	C6
C110	B3	Q185	D5
C111	B2	Q190	A1
C112	B2	R103	C1
C115	C1	R104	B1
C116	C1	R105	C1
C117	C2	R106	B1
C118	B2	R107	C1
C119	C2	R108	B1
C120	B2	R115	A2
C120	B4	R116	A2
C121	C2	R121	D2
C122	A4	R122	D2
C123	A4	R125	C4
C124	A4	R127	C2
C125	A4	R128	B2
C126	A3	R129	B5
C127	A3	R130	B5
C128	A3	R131	C5
C129	A3	R132	B4
C130	A2	R133	C5
C131	A2	R134	C4
C132	A2	R136	C4
C133	D1	R137	B4
C134	D3	R138	B4
C135	D3	R139	B4
C137	D2	R140	B4
C138	D2	R141	B3
C140	D4	R142	B3
C141	C4	R143	B3
C143	C4	R144	B3
C150	D5	R145	B2
C181	A5	R151	C4
C182	B5	R154	A2
C183	C5	R185	C4
C190	A2	R186	C4
C191	A2	R193	B1
C193	B1	R194	B1
C196	B1	R195	B1
C197	D3	R196	A1
C198	C4	R199	C3

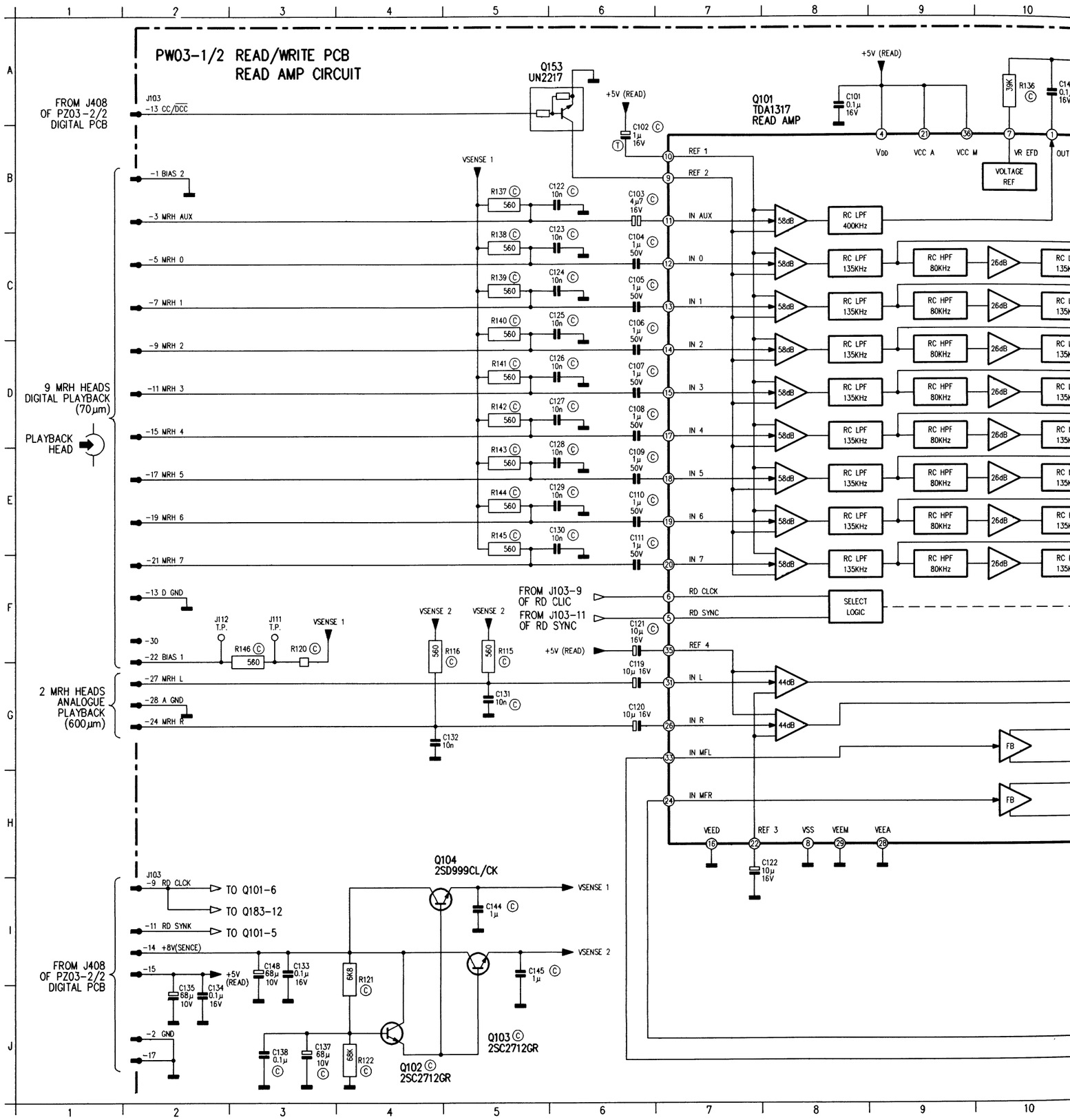

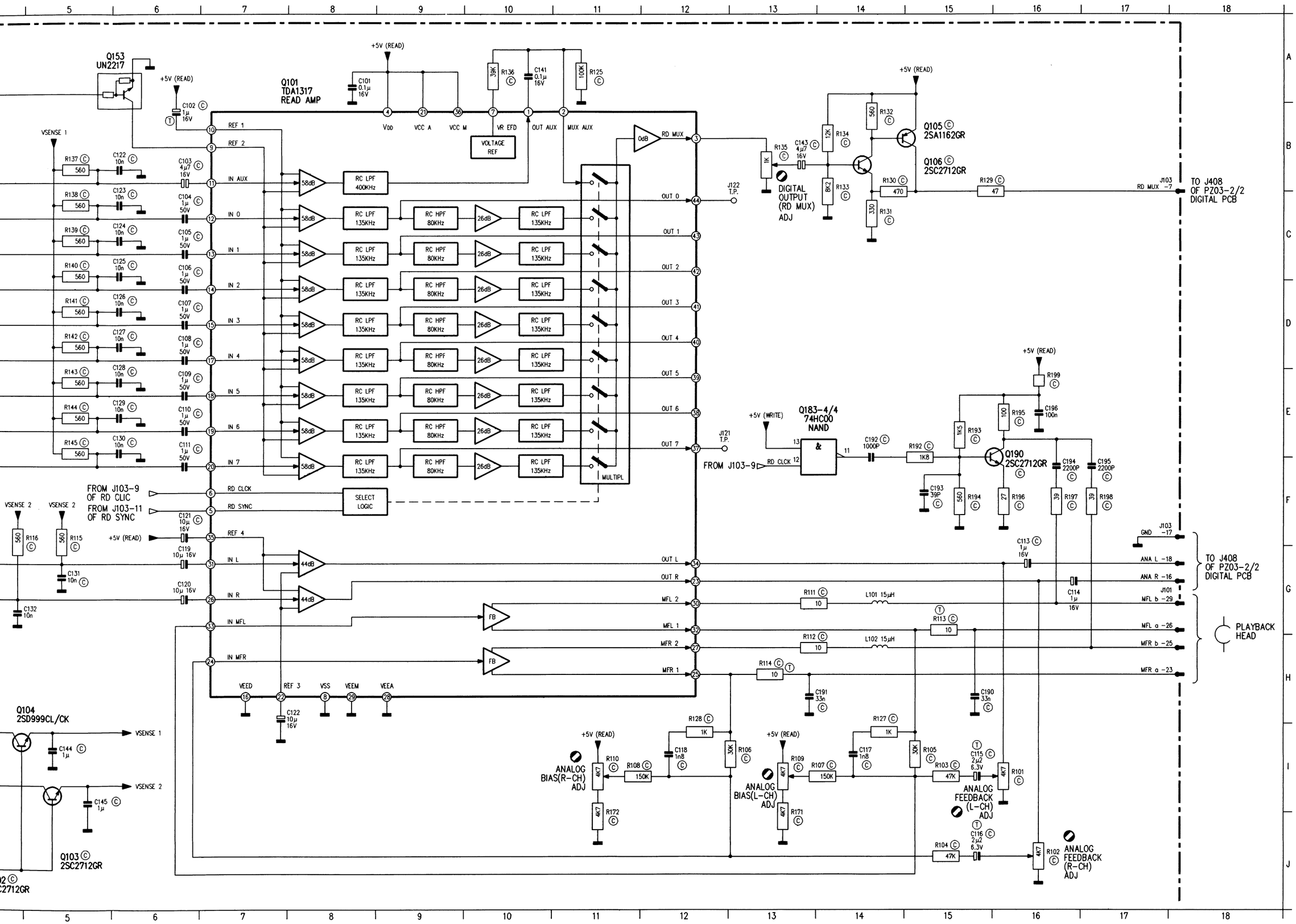

C101	A8	J103-3	B2
C102	B6	J103-30	F2
C103	B6	J103-5	C2
C104	C6	J103-7	B18
C105	C6	J103-7	C2
C106	D6	J103-9	D2
C107	D6	J103-9	I2
C108	D6	J111	F3
C109	E6	J112	F2
C110	E6	J121	E12
C111	E6	J122	C13
C113	G16	L101	G14
C114	G16	L102	H14
C115	I15	Q101	B7
C116	J15	Q102	J4
C117	I14	Q103	I5
C118	I12	Q104	I4
C119	G6	Q105	B15
C120	G6	Q106	B14
C121	F6	Q153	A6
C122	B6	Q183-4/4	E14
C122	H7	Q190	E16
C123	C6	R101	I16
C124	C6	R102	J16
C125	C6	R103	I15
C126	D6	R104	J15
C127	D6	R105	I15
C128	E6	R106	I13
C129	E6	R107	I14
C130	E6	R108	I11
C131	G5	R109	I13
C132	G4	R110	I11
C133	I3	R111	G13
C134	J2	R112	H13
C135	J2	R113	G15
C137	J3	R114	H13
C138	J3	R115	F5
C141	A10	R116	F4
C143	B13	R120	F3
C144	I5	R121	I4
C145	I5	R122	J4
C148	I3	R125	A11
C190	H15	R127	I14
C191	H13	R128	I12
C192	E14	R129	B15
C193	F15	R130	B14
C194	F16	R131	C14
C195	F17	R132	B14
C196	E16	R133	B14
J103-1	B2	R134	B14
J103-11	D2	R135	B13
J103-11	I2	R136	A10
J103-13	A2	R137	B5
J103-13	F2	R138	C5
J103-14	I2	R139	C5
J103-15	D2	R140	C5
J103-15	I2	R141	D5
J103-16	G18	R142	D5
J103-17	E2	R143	E5
J103-17	F18	R144	E5
J103-17	J2	R145	E5
J103-18	G18	R146	F3
J103-19	E2	R171	J13
J103-2	J2	R172	J11
J103-21	F2	R192	E15
J103-22	F2	R193	E15
J103-23	H18	R194	F15
J103-24	G2	R195	E16
J103-25	H18	R196	F16
J103-26	G18	R197	F16
J103-27	G2	R198	F17
J103-28	G2	R199	E16
J103-29	G18		

IGITAL PCB A SIDE (PZ03)

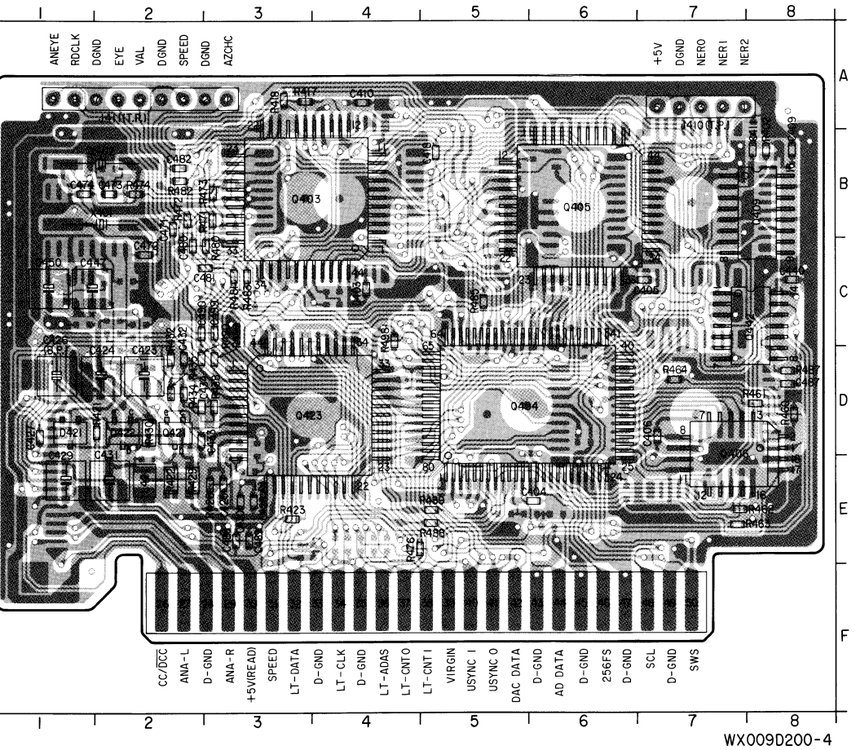

C403	C4	Q406	D7
C404	E6	Q409	B8
C405	C7	Q421	D2
C406	D7	Q422	D2
C409	B8	Q423	D3
C410	A4	Q442	C8
C411	B8	R402	B8
C418	B5	R417	A3
C423	D2	R418	A3
C424	D2	R421	D2
C425	E3	R422	E2
C426	D1	R423	E3
C427	D1	R428	E3
C428	E3	R429	E2
C429	E1	R430	D2
C430	E3	R432	D2
C431	E2	R434	D2
C432	D2	R435	D2
C433	D2	R438	D3
C434	D2	R460	D8
C440	C8	R461	D8
C447	C1	R462	E7
C450	C1	R463	E7
C471	B2	R464	D7
C472	C2	R471	B3
C473	B2	R472	B2
C474	B1	R473	B3
C480	C2	R474	B2
C481	C3	R476	E5
C482	B2	R480	C3
C487	D8	R481	C3
C488	E3	R482	B2
C489	E3	R483	C3
C490	C2	R485	C5
C499	C3	R487	D8
D421	D1	R488	E5
J410	A7	R489	E5
J411	A2	R490	D2
L421	E2	R498	C4
Q403	B3	R499	D3
Q404	D5	X401	B2
Q405	B6	X402	B2

MIDDLE LAYER PATTERN

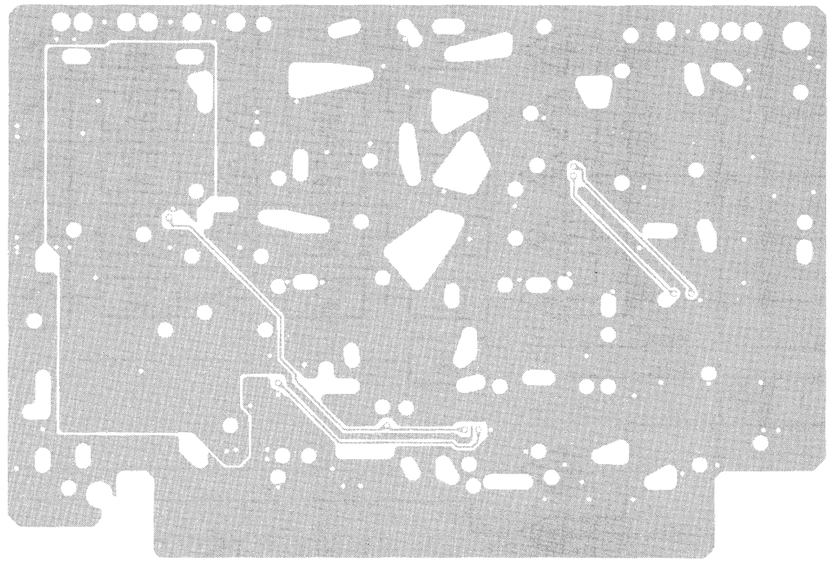

VER PATTERN

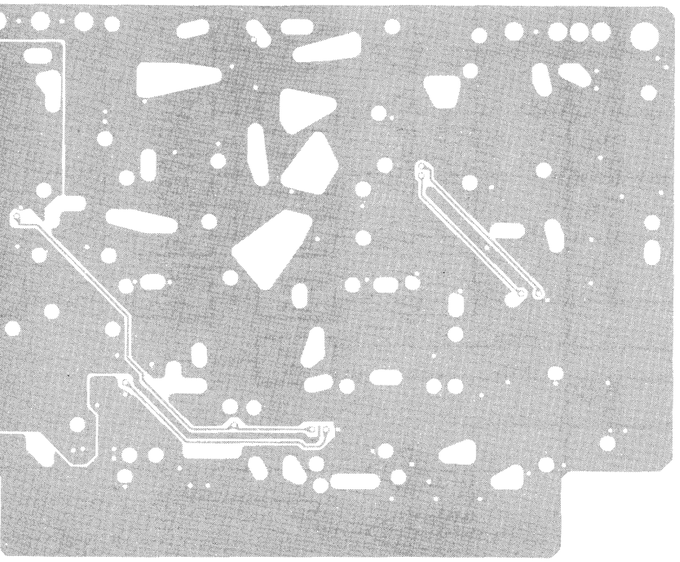

DIGITAL PCB B SIDE (PZ03)

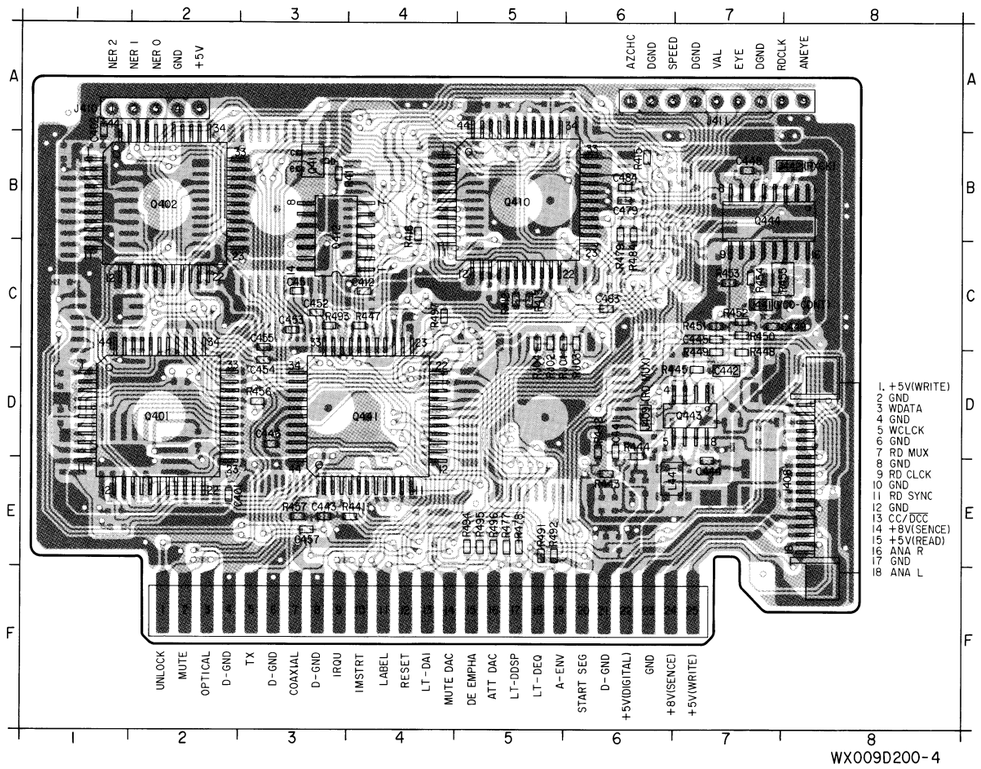

WX009D200-4

C401	E2	R411	B3	Q401	D2	R495	E5
C402	A1	R412	C5	Q402	B2	R496	E5
C412	C4	R413	C5	Q410	B5	R497	C4
C441	D6	R415	B6	Q411	B3	RJ01	C6
C442	D7	R416	B4	Q412	B3	RJ02	C5
C443	E3	R441	E4	Q441	D4	RJ03	C6
C444	E7	R442	D6	Q443	D7	RJ04	C5
C445	C7	R443	E6	Q444	B7		
C446	D3	R444	D6				
C448	B7	R445	D7				
C449	C7	R447	C4				
C451	C3	R450	C7				
C452	C3	R451	C7				
C453	C3	R452	C7				
C454	D3	R453	C7				
C455	C3	R454	C7				
C457	E3	R455	C7				
C479	B6	R456	D3				
C483	C6	R457	E3				
C484	B6	R477	E5				
J408	E8	R478	E5				
J409	D6	R479	B6				
J410	A2	R484	B6				
J411	A7	R491	E5				
J441	C7	R492	E5				
J442	B8	R493	C3				
L441	E6	R494	E5				

PW03-2/2 READ/WRITE PCB
WRITE AMP CIRCUIT

FROM J408 OF PZ03-2/2 DIGITAL PCB

J103
-1 +5V(WRITE)
-5 WCLCK
-3 WDATA
-4 GND
-6 GND
-8 GND
-10 GND
-12 GND

Q151
TDA1316T/N-T
WRITE AMP

WCLOCK
WDATA
DIG. GND
DIG. Vdd
NC
SOURCE
OFF
CLAMP
SENSE GND
ANA Vdd
SENSE R
IWR R
ANA GND
Vdd

DECODER → A0,A1 ... J0,J1
PROTECTION ← A ... J
SUPPLY BANDGAP
CLAMP 1.7V
200mV
CURRENT AMP

C151 0.1µ 16V
C150 68µ 10V
C152 0.1µ 16V

FROM Q180-C
FROM R183
FROM R184

J152 T.P.
J151 T.P.
R151 12

J181
R187 47 θ NTC 47 25C
MR HEAD
R186 68
R185 1K8

IREC ADJ
R167 100
R156 220
R155 2K2

A0 A1 B0 B1 C0 C1 D0 D1 E0 E1 F0 F1 G0 G1 H0 H1 I0 I1 J0 J1
QA QB QC QD QE QF QG QH QI QJ

J101
IRH 0 -2
IRH 1 -4
IRH 2 -6
IRH 3 -8
IRH 4 -10
IRH 5 -12
IRH 6 -14
IRH 7 -16
IRH 8 -18
IRH 9 -20

9 IRH HEAD DIGITAL RECORD (185µm)
RECORD HEAD

R166 22 C165 3n3
R165 22 C164 3n3
R164 22 C163 3n3
R163 22 C162 3n3
R162 22 C161 3n3
R161 22 C160 3n3
R160 22 C159 3n3
R159 22 C158 3n3
R158 22 C157 3n3

Q182-1/4
74HC175
FLIP-FLOP
C182 0.1µ 16V
RESET R
CLOCK CK
R CK D Q NC

Q183-3/4
74HC00
NAND

C183 0.1µ 16V
Q183-2/4
74HC00
NAND

Q181-2/4
HC4053
MULTIPLEXER

Q182-3/4
74HC175
FLIP-FLOP

Q183-1/4
74HC00
NAND

Q182-4/4
74HC175
FLIP-FLOP

Q185-4/4
74HC02
NOR
R180 1K
R181 330
R182 10
Q180 2SC2712GR
SOURCE → TO Q151-6

Q185-2/4
74HC02
NOR

C185 0.1µ 16V
Q185-3/4
74HC02
NOR
R183 12K
SENSE GND → TO Q151-9
R184 47
→ TO R185,R186

Q185-1/4
74HC02
NOR

Q184
74HC163
COUNTER
CTRDIV16
CLR LOAD ENT ENP CK A B C D
5CT=0 M1 M2 G3 G4 C5/2,3,4+ 1,5D (1) (2) (4) (8) 3CT=15
CARRY QA QB QC QD
Vcc GND
C184 0.1µ 16V

Q181-4/4
HC4053
MULTIPLEXER

Q181-1/4
HC4053
MULTIPLEXER

Q182-2/4 74CH175
FLIP-FLOP

C181 0.1µ 16V
Q181-3/4
HC4053
MULTIPLEXER
*A BINARY CH SELECT *B *C
X SW Y SW Z SW
INHIBIT
VEE Vss

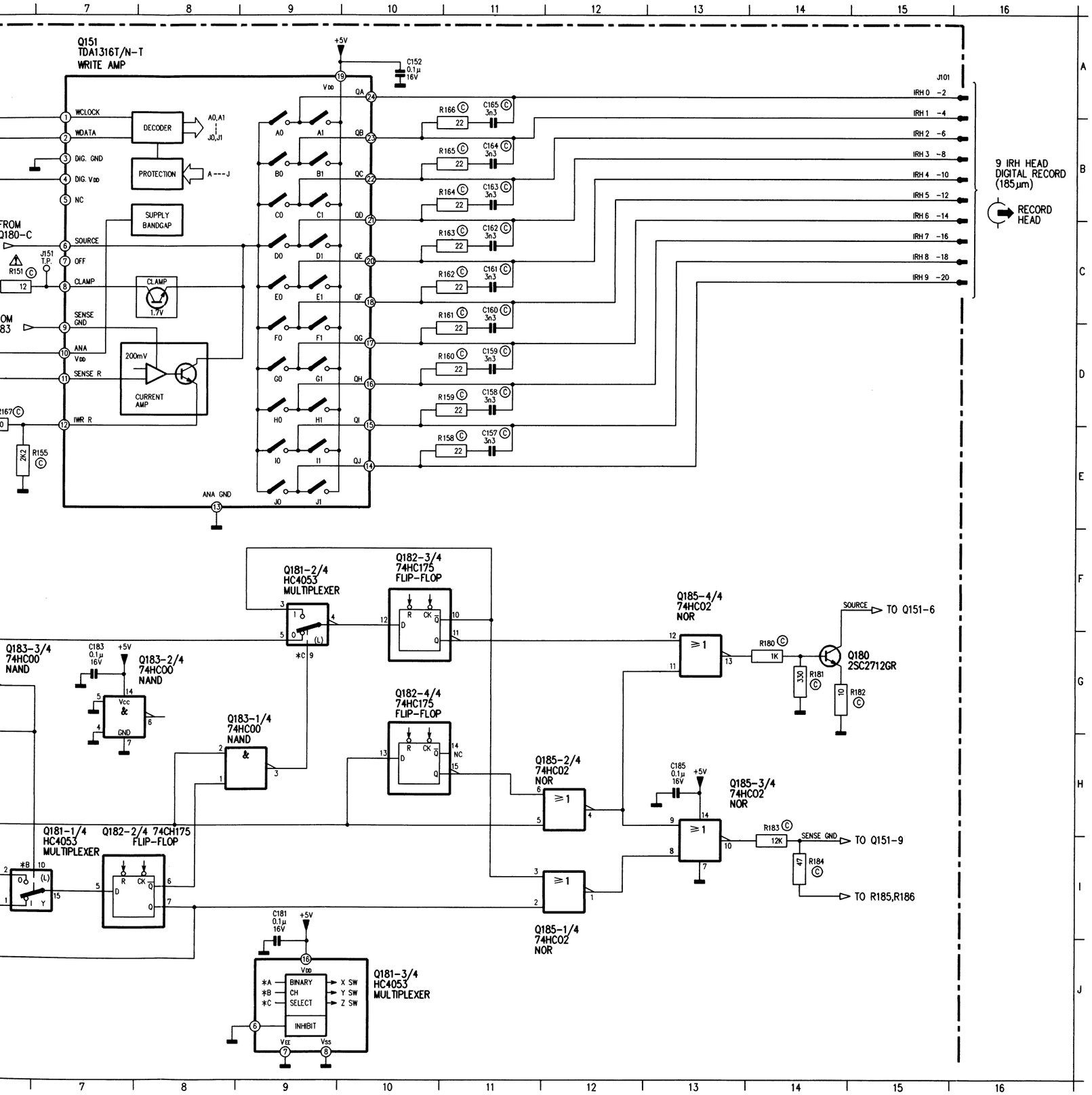

C113	D6	C195	B6	R109	D6	R163	C4
C114	D6	J101	B4	R110	D6	R164	B3
C144	D5	J103	C2	R111	C5	R165	C3
C145	D5	J111	C6	R112	C5	R166	B3
C151	D4	J112	C6	R113	C5	R167	D4
C152	C4	J121	D5	R114	C5	R171	C6
C157	B4	J122	D5	R117	C6	R172	C6
C158	C4	J151	D4	R120	C6	R180	D3
C159	B4	J152	D4	R135	D3	R181	D3
C160	C4	J181	B6	R146	C6	R182	D3
C161	B4	L101	B5	R152	D4	R183	E3
C162	C3	L102	B5	R153	D4	R184	E3
C163	B3	Q103	E6	R155	D4	R188	D3
C164	C3	Q104	E5	R156	D4	R192	C6
C165	B3	Q151	C4	R158	B4	R197	B6
C184	B3	Q180	D3	R159	C4	R198	B6
C185	E2	Q184	B2	R160	B4		
C192	C6	R101	D6	R161	C4		
C194	B6	R102	C6	R162	B4		

READ WRITE PCB B SIDE (PW03)

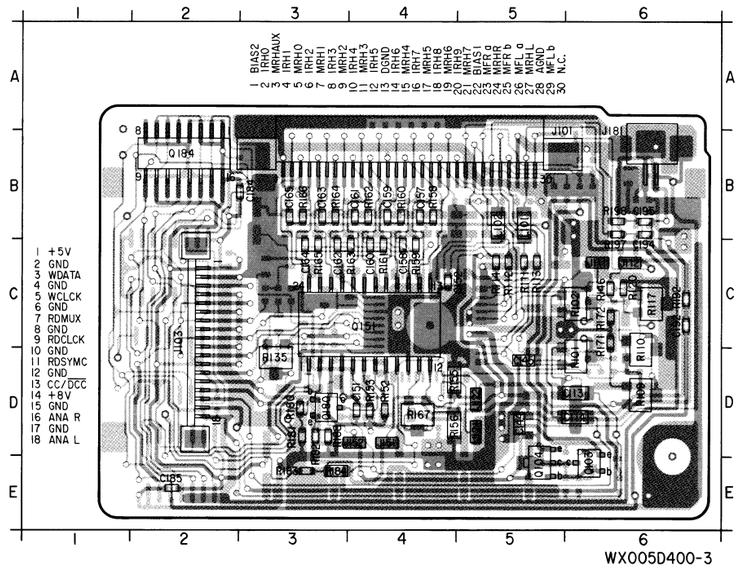

C150	B6	J101-16	C16	Q180	G14	R156	E6
C151	B5	J101-18	C16	Q181-1/4	I7	R158	E11
C152	A10	J101-2	A16	Q181-2/4	F9	R159	D11
C157	E11	J101-20	C16	Q181-3/4	J9	R160	D11
C158	D11	J101-4	A16	Q181-4/4	I5	R161	D11
C159	D11	J101-6	B16	Q182-1/4	F4	R162	C11
C160	D11	J101-8	B16	Q182-2/4	I7	R163	C11
C161	C11	J103-1	A2	Q182-3/4	F10	R164	B11
C162	C11	J103-10	C2	Q182-4/4	H10	R165	B11
C163	B11	J103-12	C2	Q183-1/4	H9	R166	B11
C164	B11	J103-3	B2	Q183-2/4	G7	R167	D6
C165	B11	J103-4	B2	Q183-3/4	G6	R180	G14
C182	E5	J103-5	A2	Q184	H3	R181	G14
C183	G7	J103-6	B2	Q185-1/4	I12	R182	G14
C184	J3	J103-8	B2	Q185-2/4	H12	R183	I14
C185	H13	J151	C7	Q185-3/4	I13	R184	I14
J101-10	B16	J152	C6	Q185-4/4	G13	R185	D6
J101-12	B16	J181	D4	R151	C6	R186	D5
J101-14	B16	Q151	J7	R155	E6	R187	D4

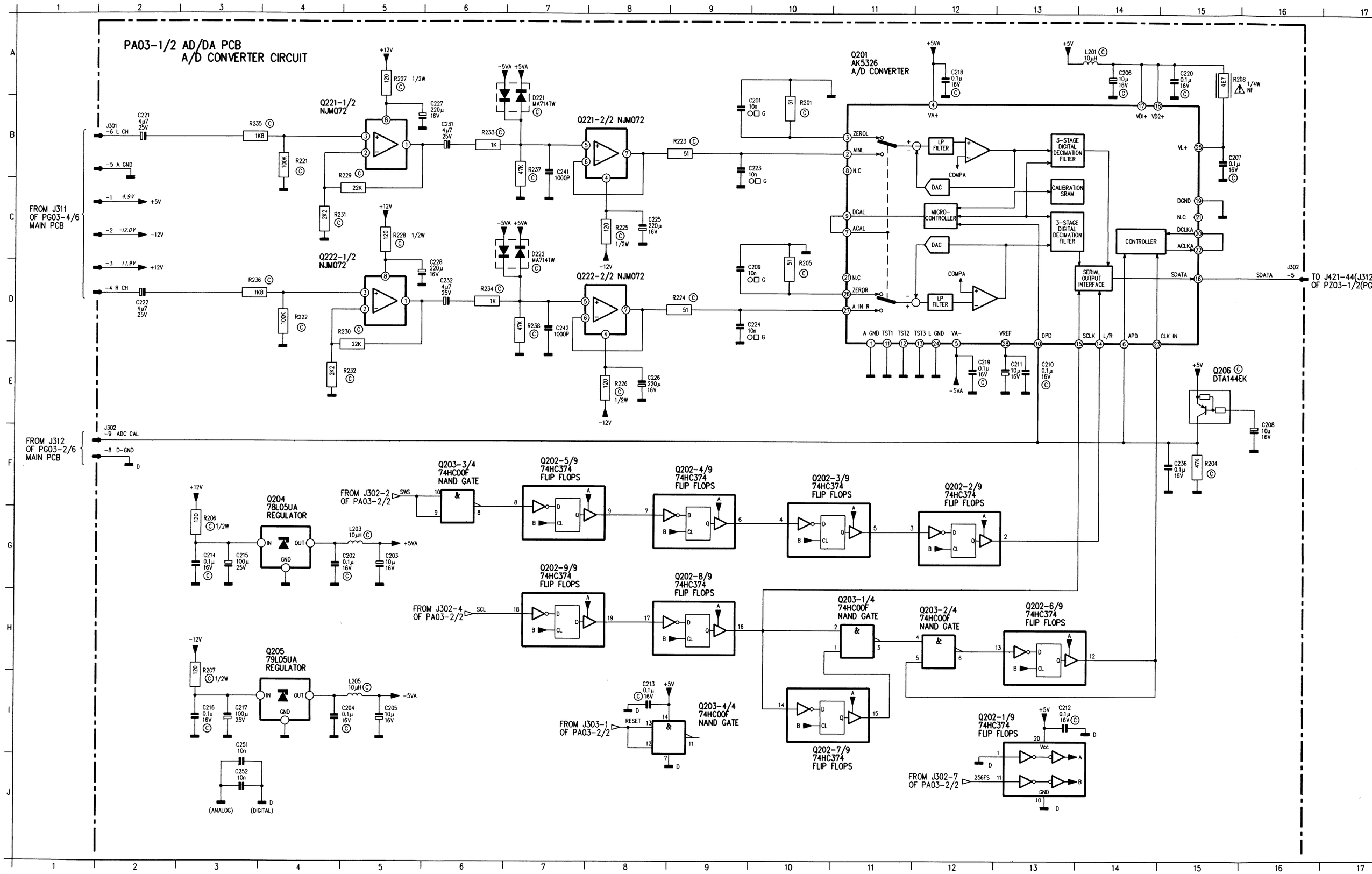
PA03-1/2 AD/DA PCB
A/D CONVERTER CIRCUIT
FROM J311 OF PG03-4/6 MAIN PCB
FROM J312 OF PG03-2/6 MAIN PCB
Q221-1/2 NJM072
Q222-1/2 NJM072
Q221-2/2 NJM072
Q222-2/2 NJM072
Q201 AK5326 A/D CONVERTER
LP FILTER
DAC
MICRO-CONTROLLER
3-STAGE DIGITAL DECIMATION FILTER
CALIBRATION SRAM
CONTROLLER
SERIAL OUTPUT INTERFACE
TO J421-44(J312 OF PZ03-1/2(PG
Q206 DTA144EK
Q204 78L05UA REGULATOR
Q205 79L05UA REGULATOR
Q203-3/4 74HC00F NAND GATE
Q202-5/9 74HC374 FLIP FLOPS
Q202-4/9 74HC374 FLIP FLOPS
Q202-3/9 74HC374 FLIP FLOPS
Q202-2/9 74HC374 FLIP FLOPS
Q202-9/9 74HC374 FLIP FLOPS
Q202-8/9 74HC374 FLIP FLOPS
Q203-1/4 74HC00F NAND GATE
Q203-2/4 74HC00F NAND GATE
Q202-6/9 74HC374 FLIP FLOPS
Q202-7/9 74HC374 FLIP FLOPS
Q203-4/4 74HC00F NAND GATE
Q202-1/9 74HC374 FLIP FLOPS
FROM J302-2 OF PA03-2/2
FROM J302-4 OF PA03-2/2
FROM J303-1 OF PA03-2/2
FROM J302-7 OF PA03-2/2
(ANALOG)
(DIGITAL)

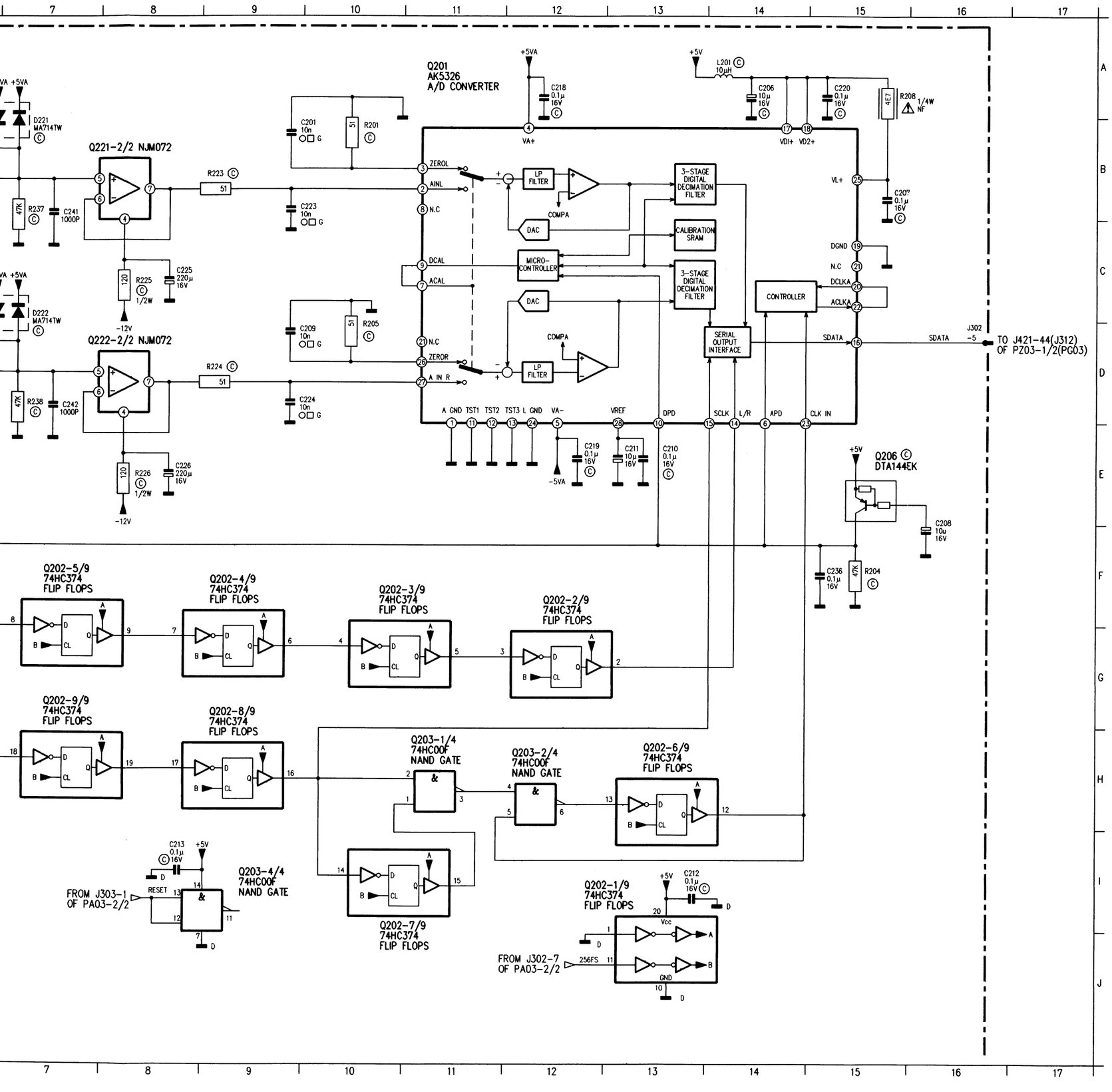

C201	B9
C202	G4
C203	G5
C204	I4
C205	I5
C206	A14
C207	B15
C208	F16
C209	D9
C210	E13
C211	E13
C212	I13
C213	I8
C214	G3
C215	G3
C216	I3
C217	I3
C218	A12
C219	E12
C220	A15
C221	B2
C222	D2
C223	B9
C224	D9
C225	C8
C226	E8
C227	B5
C228	D5
C231	B6
C232	D6
C236	F15
C241	B7
C242	D7
C251	J3
C252	J3
D221	B7
D222	C7
J301-1	C2
J301-2	C2
J301-3	D2
J301-4	D2
J301-5	B2
J301-6	B2
J302-5	D16
J302-8	F2
J302-9	F2
L201	A14
L203	G5
L205	I5
Q201	B11
Q202-1/9	I13
Q202-2/9	G12
Q202-3/9	G10
Q202-4/9	F9
Q202-5/9	F7
Q202-6/9	H13
Q202-7/9	I10
Q202-8/9	H9
Q202-9/9	H7
Q203-1/4	H11
Q203-2/4	H12
Q203-3/4	F6
Q203-4/4	I9
Q204	G4
Q205	I4
Q206	E15
Q221-1/2	B5
Q221-2/2	B8
Q222-1/2	D5
Q222-2/2	D8
R201	B10
R204	F15
R205	D10
R206	G3
R207	I3
R208	A15
R221	B4
R222	D4
R223	B9
R224	D9
R225	C8
R226	E8
R227	A5
R228	C5
R229	C5
R231	C4
R232	E4
R233	B6
R234	D6
R235	B3
R236	D3
R237	B7
R238	D7

AD/DA PCB (PA03)

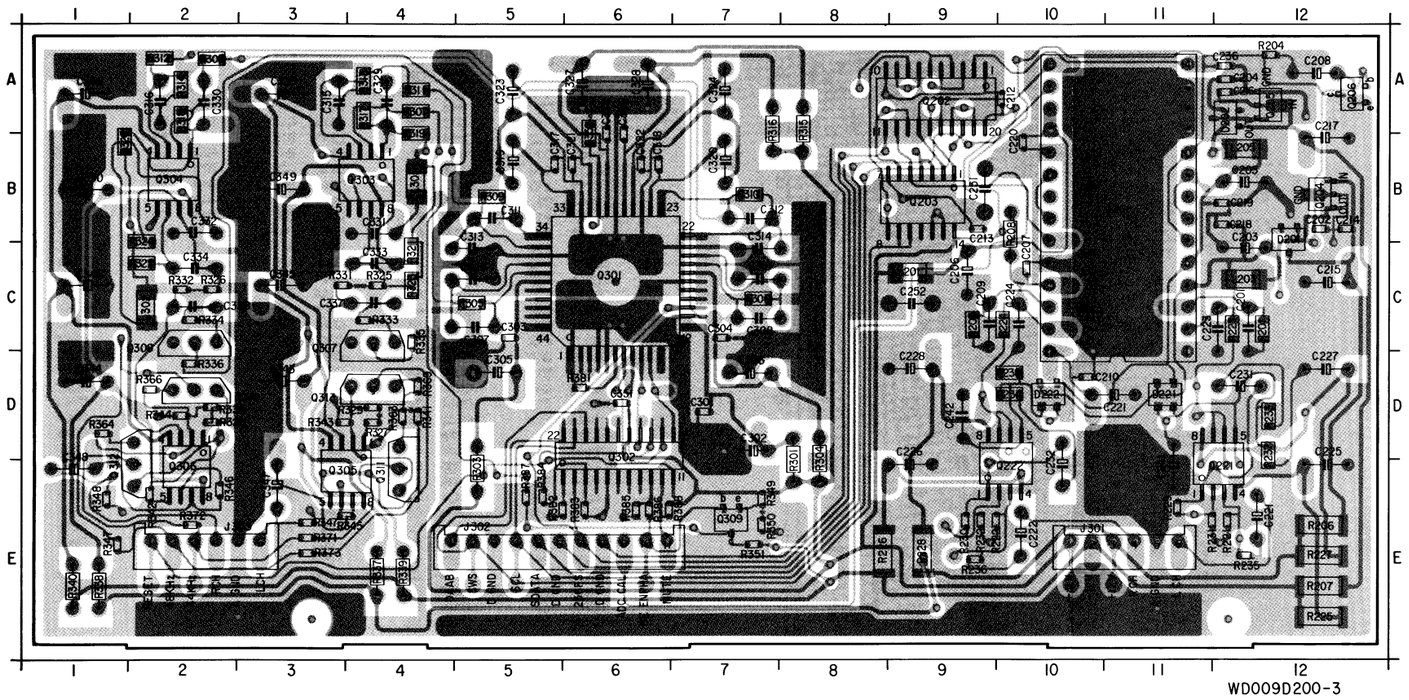

C201	C12	C317	B5	Q303	B4	R318	A2
C202	B12	C318	B6	Q304	B2	R319	A4
C203	C12	C319	B5	Q305	E3	R320	B1
C204	A12	C320	B7	Q306	E2	R321	C4
C205	B12	C321	B6	Q307	C4	R322	C2
C206	C9	C322	B6	Q308	C2	R323	C4
C207	C10	C323	A5	Q309	E7	R324	B2
C208	A12	C324	A7	Q311	E4	R325	C4
C209	C9	C325	A6	Q312	E2	R326	C2
C210	D10	C326	A6	Q313	D4	R327	D4
C212	A10	C327	A6	Q314	D2	R328	D2
C213	B9	C328	A6	R201	C12	R329	D4
C214	B12	C329	A4	R204	A12	R330	D2
C215	C12	C330	A2	R205	C9	R331	C3
C216	A12	C331	B4	R206	E12	R332	C2
C217	B12	C332	B2	R207	E12	R333	C4
C218	B12	C333	C4	R208	B10	R334	C2
C219	B12	C334	C2	R221	E12	R335	C4
C220	B10	C335	A3	R222	E9	R336	D2
C221	D11	C336	A1	R223	C12	R337	E4
C221	E12	C337	C4	R224	C10	R338	E1
C222	D10	C338	C2	R225	E12	R339	E4
C222	E10	C343	D3	R226	E7	R340	E1
C223	C12	C344	D1	R226	E8	R341	D4
C224	C10	C345	C3	R227	E12	R342	E2
C225	E12	C346	C1	R228	E9	R343	D3
C226	E9	C347	E3	R229	E11	R344	D2
C227	D12	C348	E1	R230	E9	R345	E3
C228	D9	C349	B3	R231	E12	R346	E2
C231	D12	C350	B1	R232	E9	R347	E1
C232	E10	C351	D6	R233	D12	R347	E3
C236	A12	D201	B12	R234	D10	R348	E1
C241	E11	D202	A12	R235	E12	R349	E7
C242	D9	D221	D11	R236	E9	R350	E7
C251	B9	J301	E10	R237	D12	R351	E7
C252	C9	J302	E5	R238	D10	R352	B6
C301	D7	J303	E2	R301	E8	R363	D4
C302	D7	L201	C9	R303	E5	R364	D1
C303	C5	L203	C12	R304	E8	R366	D2
C304	C7	L205	B12	R305	C5	R369	D4
C305	D5	L301	B4	R306	C7	R371	E3
C306	D7	L302	C2	R307	A4	R372	E2
C307	C5	Q201	B11	R308	A2	R373	E3
C308	C7	Q202	A9	R309	B5	R381	D6
C309	C5	Q203	B9	R310	B7	R382	E5
C310	C7	Q204	B12	R311	A4	R383	E6
C311	B5	Q205	A12	R312	A2	R384	E5
C312	B7	Q206	A12	R313	A4	R385	E6
C313	C5	Q221	E12	R314	A2	R386	E6
C314	C7	Q222	E10	R315	A8	R387	E5
C315	A3	Q301	C6	R316	A7	R388	E6
C316	A2	Q302	D6	R317	A4		

AD/DA PCB (PA03)

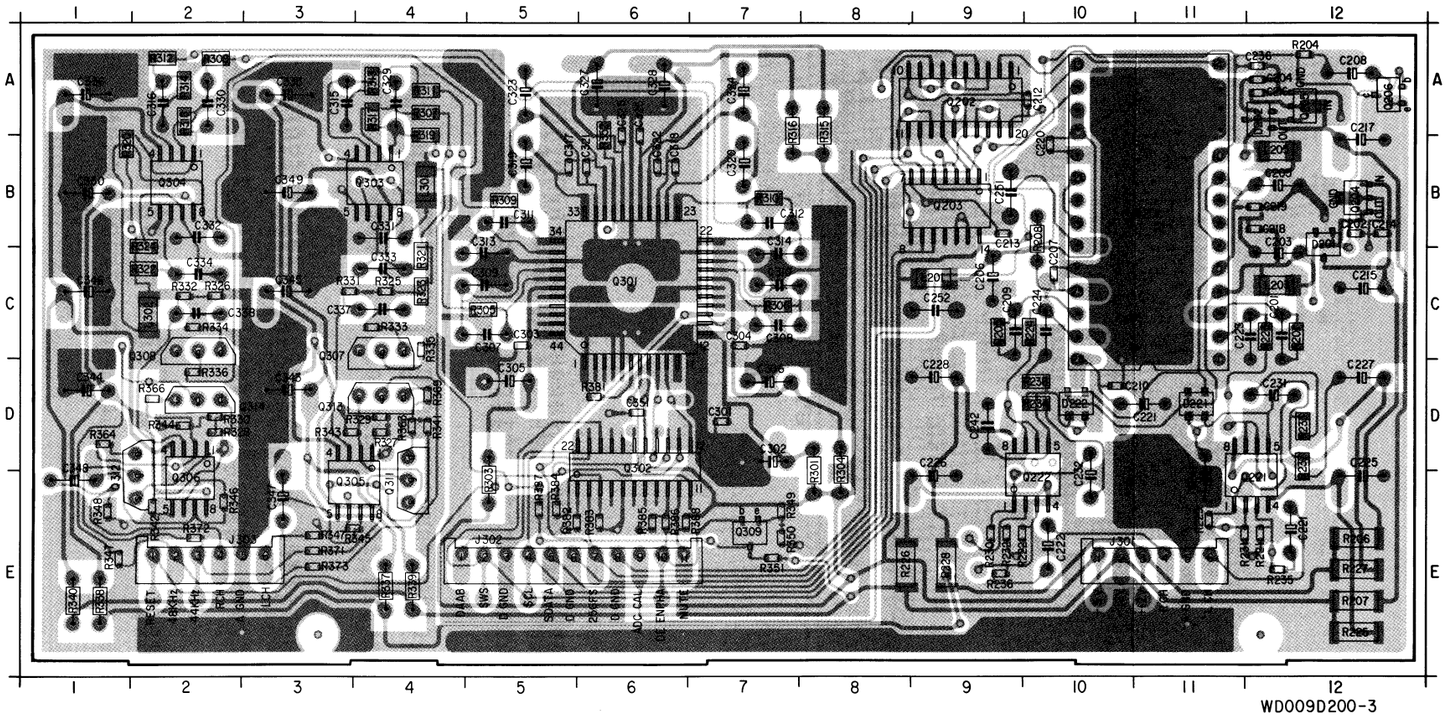

C201	C12	C307	C5	D202	A12	R226	E7	R330	D2						
C202	B12	C308	C7	D221	D11	R226	E8	R331	C3						
C203	C12	C309	C5	J301	E10	R227	E12	R332	C2						
C204	A12	C310	C7	J302	E5	R228	E9	R333	C4						
C205	B12	C311	B5	J303	E2	R229	E11	R334	C2						
C206	C9	C312	B7	L201	C9	R230	E9	R335	C4						
C207	C10	C313	C5	L203	C12	R231	E12	R336	D2						
C208	A12	C314	C7	L205	B12	R232	E9	R337	E4						
C209	C9	C315	A3	L301	B4	R233	D12	R338	E1						
C210	D10	C316	A2	L302	C2	R234	D10	R339	E4						
C212	A10	C317	B5	Q201	B11	R235	E12	R340	E1						
C213	B9	C318	B6	Q202	A9	R236	E9	R341	D4						
C214	B12	C319	B5	Q203	B9	R237	D12	R342	E2						
C215	C12	C320	B7	Q204	B12	R238	D10	R343	D3						
C216	A12	C321	B6	Q205	A12	R301	E8	R344	D2						
C217	B12	C322	B6	Q206	A12	R303	E5	R345	E3						
C218	B12	C323	A5	Q221	E12	R304	E8	R346	E2						
C219	B12	C324	A7	Q222	E10	R305	C5	R347	E1						
C220	B10	C325	A6	Q301	C6	R306	C7	R347	E3						
C221	D11	C326	A6	Q302	D6	R307	A4	R348	E1						
C221	E12	C327	A6	Q303	B4	R308	A2	R349	E7						
C222	D10	C328	A6	Q304	B2	R309	B5	R350	E7						
C222	E10	C329	A4	Q305	E3	R310	B7	R351	E7						
C223	C12	C330	A2	Q306	E2	R311	A4	R352	B6						
C224	C10	C331	B4	Q307	C4	R312	A2	R363	D4						
C225	E12	C332	B2	Q308	C2	R313	A4	R364	D1						
C226	E9	C333	C4	Q309	E7	R314	A2	R366	D2						
C227	D12	C334	C2	Q311	E4	R315	A8	R369	D4						
C228	D9	C335	A3	Q312	E2	R316	A7	R371	E3						
C231	D12	C336	A1	Q313	D4	R317	A4	R372	E2						
C232	E10	C337	C4	Q314	D2	R318	A2	R373	E3						
C236	A12	C338	C2	R201	C12	R319	A4	R381	D6						
C241	E11	C343	D3	R204	A12	R320	B1	R382	E5						
C242	D9	C344	D1	R205	C9	R321	C4	R383	E6						
C251	B9	C345	C3	R206	E12	R322	C2	R384	E5						
C252	C9	C346	C1	R207	E12	R323	C4	R385	E6						
C301	D7	C347	E3	R208	B10	R324	B2	R386	E6						
C302	D7	C348	E1	R221	E12	R325	C4	R387	E5						
C303	C5	C349	B3	R222	E9	R326	C2	R388	E6						
C304	C7	C350	B1	R223	C12	R327	D4								
C305	D5	C351	D6	R224	C10	R328	D2								
C306	D7	D201	B12	R225	E12	R329	D4								

PA03-2/2 AD/DA PCB
D/A CONVERTER CIRCUIT

Q301
SAA7350
D/A CONVERTER

Q302
SM5840FS
DIGITAL FILTER

6608
SAA7350

J302
-3 D-GND
-6 D-GND
-1 DAAB
-4 SCL
-2 SWS
-11 MUTE
-7 256FS
-10 DE ENPHA

FROM J421-42(J312-1) OF PZ03-1/2(PG03)
FROM J421-48(J312-4) OF PZ03-1/2(PG03)
FROM J421-50(J312-2) OF PZ03-1/2(PG03)
FROM J312 OF PG03-5/6
FROM J421-46(J312-7) OF PZ03-1/2(PG03)
FROM J312 OF PG03-2/6
TO Q309-E

To Q203-9,10
To Q202-11
To Q202-18
To Q203-12.13
OF PA03-1/2

J303
-1 RESET

FROM J313 OF PG03-2/6 MAIN PCB
-3 44KHz → TO R372
-2 48KHz → TO R374

Q313
2SK372 GR/BL

Q311
2SK372 GR/BL

Q305-2/2
NJM5532M

Q305-1/2
NJM5532M

FROM Q303-7 L CH
FROM J302-10 DE-ENPHA

Q309
2SA812

Q307
2SK372GR/BL

DE-ENPHASIS

TO J303-6 L CH

FROM Q304-7 R CH

Q308
2SK372GR/BL

Q312
2SK372GR/BL

Q314
2SK372GR/BL

Q306-2/2
NJM5532M

Q306-1/2
NJM5532M

Q303-2/2
NJM5532M

Q303-1/2
NJM5532M

Q304-2/2
NJM5532M

Q304-1/2
NJM5532M

L301 220µH
L302 220µH

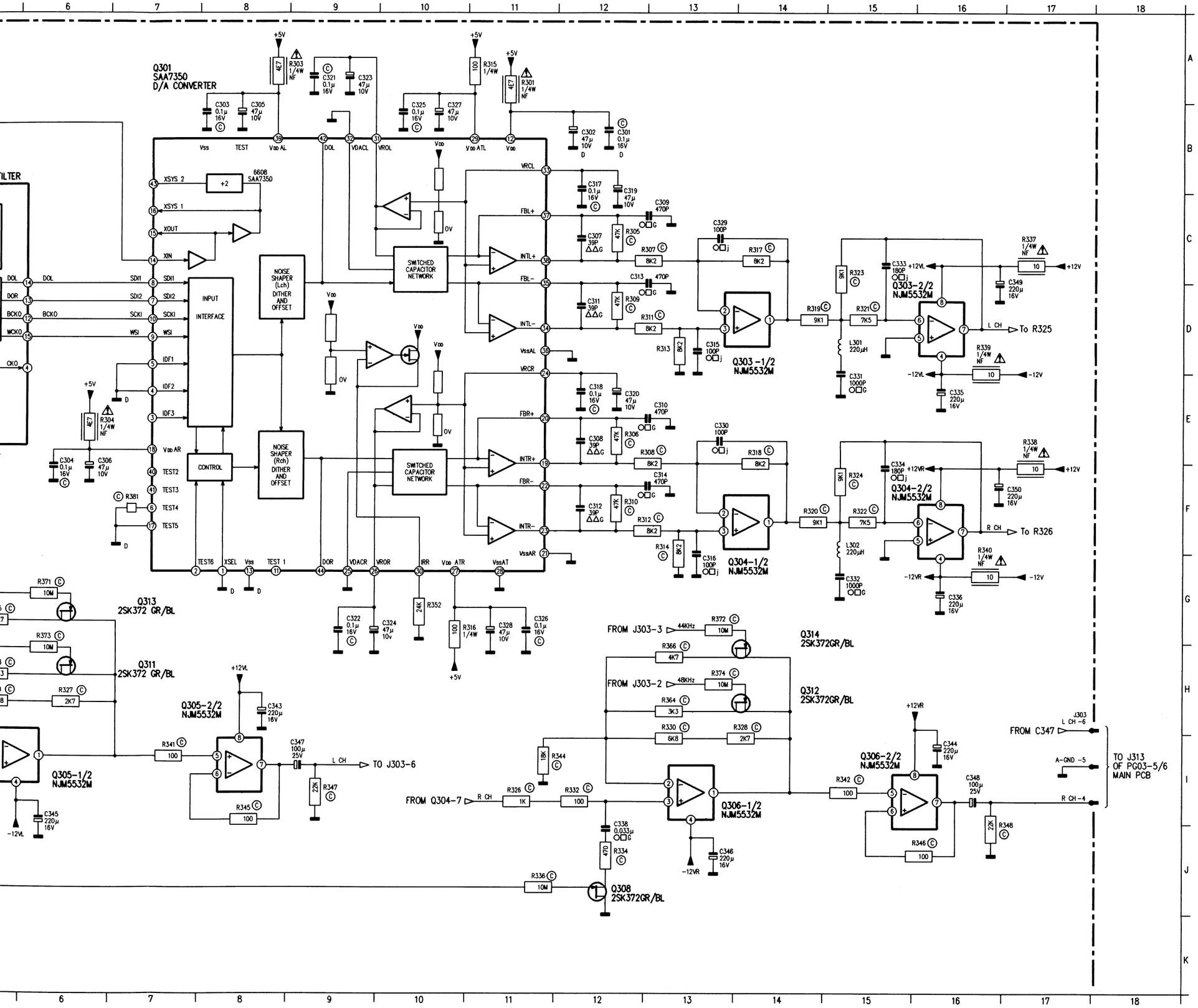

C301	B12	R316	G10
C302	B12	R317	C14
C303	B8	R318	E14
C304	F6	R319	D14
C305	B8	R320	F14
C306	F6	R321	D15
C307	C12	R322	F15
C308	E12	R323	C15
C309	C13	R324	F15
C310	E13	R325	I4
C311	D12	R326	I11
C312	F12	R327	H6
C313	D13	R328	I14
C314	F13	R329	H5
C315	D13	R330	I13
C316	F13	R331	I4
C317	B12	R332	I12
C318	E12	R333	I5
C319	B12	R334	J12
C320	E12	R335	J4
C321	A9	R336	J11
C322	G9	R337	C17
C323	A9	R338	F17
C324	G9	R339	D16
C325	B10	R340	G16
C326	G11	R341	I7
C327	B10	R342	I15
C328	G11	R343	H4
C329	C13	R344	I11
C330	E13	R345	I8
C331	D15	R346	J16
C332	G15	R347	I9
C333	C15	R348	J16
C334	F15	R349	J2
C335	E16	R350	J3
C336	G16	R351	J3
C337	I5	R352	G10
C338	J12	R363	H5
C343	H8	R364	H13
C344	I16	R365	G5
C345	I6	R366	H13
C346	J13	R371	G6
C347	I9	R372	G13
C348	I16	R373	H6
C349	D16	R374	H13
C350	F16	R381	F7
C351	B4	R382	E3
J302-1	C2	R383	E3
J302-10	E2	R385	D3
J302-11	D2	R387	E2
J302-2	C2	R388	D2
J302-3	B2		
J302-4	C2		
J302-6	B2		
J302-7	D2		
J303-1	F2		
J303-2	H2		
J303-3	G2		
J303-4	I17		
J303-5	I17		
J303-6	H17		
L301	D15		
L302	F15		
Q301	B7		
Q302	B4		
Q303-1/2	D14		
Q303-2/2	D16		
Q304-1/2	F14		
Q304-2/2	F16		
Q305-1/2	I5		
Q305-2/2	I8		
Q306-1/2	I13		
Q306-2/2	I15		
Q307	J4		
Q308	J12		
Q309	J3		
Q311	H6		
Q312	H14		
Q313	G6		
Q314	H14		
R301	A11		
R303	A8		
R304	E6		
R305	C12		
R306	E12		
R307	C13		
R308	E13		
R309	D12		
R310	F12		
R311	D13		
R312	F13		
R313	D13		
R314	F13		
R315	A11		

PM03 TRAY WIRE CONNECTIV, SERVO PCB

FROM JM02 OF PG03-3/6 MAIN PCB

JW06
-6 FWD
-5 REV 12.9V → TO RS05
-8 CPM+ 13.4V (+12V) → TO JW12-4
-7 CPM- → TO JW12-5
-9 SPEED (DCC)
-10 13.4V → +12V

R001 4K7 · R002 68K · R003 270K · R004 1K · R005 100K · R006 100K · R007 6K8 · R008 100K · R009 4K7 · R010 4K7 · R011 10K · R012 3K3 · R013 3K9 · R014 180K · R018 10K · R019 10K

C001 0.22µ 50V · C002 2µ2 50V · C003 0.47µ 50V · C004 10n · C005 220µ 6.3V · C006 100n · C007 100n

D001 1SS176 ETC · D002 2.0V · D003 2.0V

Q001-1/4 NJM2902 · Q001-2/4 NJM2902 · Q001-3/4 NJM2902 · Q001-4/4 NJM2902

Q011 2SC536 SP/ETC

QS01 74HC4066 QUAD ANALOG SW
QS01-1/4 · QS01-2/4 · QS01-3/4 · QS01-4/4

SIDE B SPEED ADJ · SIDE A SPEED ADJ

RS01 12K · RS02 4K7 · RS03 130 · RS04 220 · RS05 47K · RS06 4K7 · RS07 4K7 · RS08 470

NTC THERMISTOR · TEST POINT JS01

QS02 DTC144TS · QS003 2SC536 SP/ETC

FROM JW06-8 (+12V) CPM+ · FROM JW06-7 CPM- · FROM JW06-5 REV

JW12 WM12
FWD -6 → -6 → M072 REEL MOTOR (FWD/REV)
REV -7 → -7
CPM+ -4 → -4 CPM+
B -2 → -2 B → M071 MAIN MOTOR (CAPSTAN)
A -3 → -3 A
CPM- -5 → -5 CPM-
-1 N.C → -1 N.C

JW01-2/2 · WM01 · J071-2/2
TRG.SOL -1 → -1 → L071 D071 TRIGER SOLENOID
BRK SOL -8 → -8 → L072 D072 BRAKE SOLENOID

MECHA BLOCK-2/

FROM JM01 OF PG03-3/6 MAIN PCB
JW02
-1 TRG SOL
-8 BRK SOL

MECHA BLOCK-1/3

Q071 TAKE-UP REEL (RIGHT) · Q072 SUPPLY REEL (LEFT)

R071 18K · R072 18K · R073 18K · R074 18K

J071-1/2 · WM01 · JW01-1/2 · JW02

T-REEL -5 → T-REEL -5 → -3/6
+5V -6 → -6 → +5V -6 → -3/6
GND -4 → -4 → GND -4 → -3/6
S-REEL -7 → -7 → S-REEL -7 → -3/6
TAPE IN -2 → -2 → TAPE IN -2 → -3/6
MODE SW -3 → -3 → MODE SW -3 → -3/6
CrO2 -9 → -9 → CrO2 -9 → -5/6

S072 · S071 · S073

TO JM01 OF PG03 MAIN PCB

MECHA BLOCK-3/3

QUICK SENSOR Q073

RED · BLACK · WHITE · WM32 · +5V · LED · OUT

JW32 -3 +5V · -2 3.8V · -1

R031 150

QUICK SENSOR SENSITIVITY ADJ · R036 22K · R034 2K2

J031 T.P QUICK SENSOR

JW05
+5V 5.0V +5V -5
GND -4
OUT -3
→ TO JM04 OF PG03-2/6 MAIN PCB

S091 · S092

HOLE 5 -6 · HOLE 4 -4 · HOLE 3 -3 · GND -5 · DCC/CC -2 (OPEN DCC) · DCC REC -1 (OPEN REC OK)

JW93 -6 HOLE 5 · -4 HOLE 4 · -3 HOLE 3 · -5 GND · -2 DCC/CC · -1 DCC REC

JW05
LNG2 -11 → -1
LNG1 -9 → -3
LNG0 -8 → -4
GND -10 → -2
DCC/CC -7 → -5
REC PROTECT -6 → -6
→ TO JU01 OF PG03-2/6 MAIN PCB

TRAY MOTOR · M051 · RED · BROWN · WM04 · JW14 -3 · -2 CLOCE · -1 OPEN

JW05
CLOSE -2 → -2
OPEN -1 → -1
→ TO JM04 OF PG03-3/6 MAIN PCB

TRAY SWITCH

S052 OPEN SW · S051 CLOCE SW · YELLOW · BLUE · WM03 · JW03 -3 +5V · -4 OPEN · -1 +5V · -2 CLOSE

JW06
+5V 5.0V -3 → -2
OPEN -4 → -1
+5V 5.0V -1 → -N.C
CLOSE -2 → -3
→ TO JM03 OF PG03-3/6 MAIN PCB

	OPEN	ACT	CLOSE
S052	ON	OFF	OFF
S051	OFF	OFF	ON

LOADER BLOCK

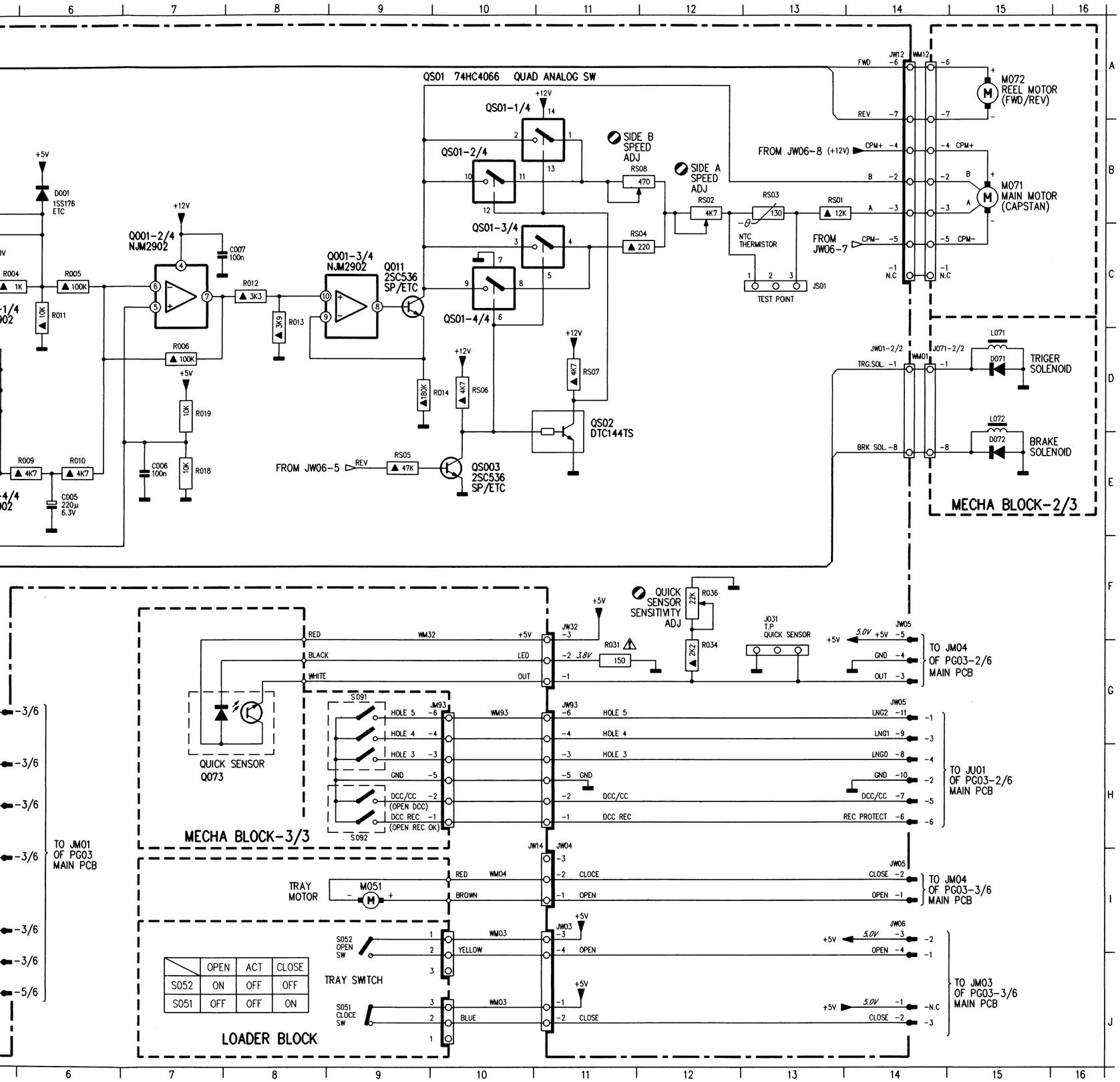

	OPEN	ACT	CLOSE
S052	ON	OFF	OFF
S051	OFF	OFF	ON

C001	D4	L071	D15
C002	C5	LO72	E15
C003	E4	M051	I9
C004	D5	M071	B15
C005	E6	M072	A15
C006	E7	Q001-1/4	C5
C007	C7	Q001-2/4	C7
D001	B6	Q001-3/4	C9
D002	D5	Q001-4/4	E5
D003	D5	Q011	C9
D071	D15	Q071	G3
DO72	E15	Q072	H3
J031	G13	Q073	G8
J071-1/2	G4	QS003	E10
J071-1/2-2I4		QS01-1/4	B11
J071-1/2-3J4		QS01-2/4	B10
J071-1/2-7I4		QS01-3/4	C11
J071-1/2-9J4		QS01-4/4	C10
J071-2/2	D14	QS02	D11
JM93	G10	R001	C3
JS01	C13	R002	C4
JW01-1/2	G4	R003	B5
JW01-1/2-2I4		R004	C5
JW01-1/2-3J4		R005	C6
JW01-1/2-7I4		R006	D7
JW01-1/2-9J4		R007	D4
JW01-2/2	D14	R008	D5
JW02-1	F2	R009	E6
JW02-2	I5	R010	E6
JW02-3	J5	R011	C6
JW02-4	H4	R012	C8
JW02-5	G5	R013	C8
JW02-6	H4	R014	D9
JW02-7	I5	R018	E7
JW02-8	F2	R019	D7
JW02-9	J5	R031	G11
JW03	I11	R034	G12
JW03-1	J11	R036	F12
JW03-2	J11	R071	G3
JW03-4	J11	R072	G3
JW04	I11	R073	I3
JW05-1	I14	R074	I3
JW05-10	H14	RS01	B13
JW05-11	G14	RS02	B12
JW05-2	I14	RS03	B13
JW05-3	G14	RS04	C11
JW05-4	G14	RS05	E9
JW05-5	G14	RS06	D10
JW05-6	H14	RS07	D11
JW05-7	H14	RS08	B11
JW05-8	H14	S052	I9
JW05-9	G14	S071	J3
JW06-1	J14	S072	I3
JW06-10	C2	S073	J3
JW06-2	J14	S091	G9
JW06-3	I14	S092	H9
JW06-4	J14	SD51	J9
JW06-5	A2	WM01	D14
JW06-6	A2	WM01	G4
JW06-7	B2	WM03	I10
JW06-8	B2	WM03	J10
JW06-9	C2	WM04	I10
JW12-1	C14	WM12-1	C14
JW12-2	B14	WM12-2	B14
JW12-3	B14	WM12-3	B14
JW12-4	B14	WM12-4	B14
JW12-5	C14	WM12-5	C14
JW12-6	A14	WM12-6	A14
JW12-7	A14	WM12-7	A14
JW32	G11	WM32	G9
JW93	G11	WM93	G10

FRONT PCB (PD03)

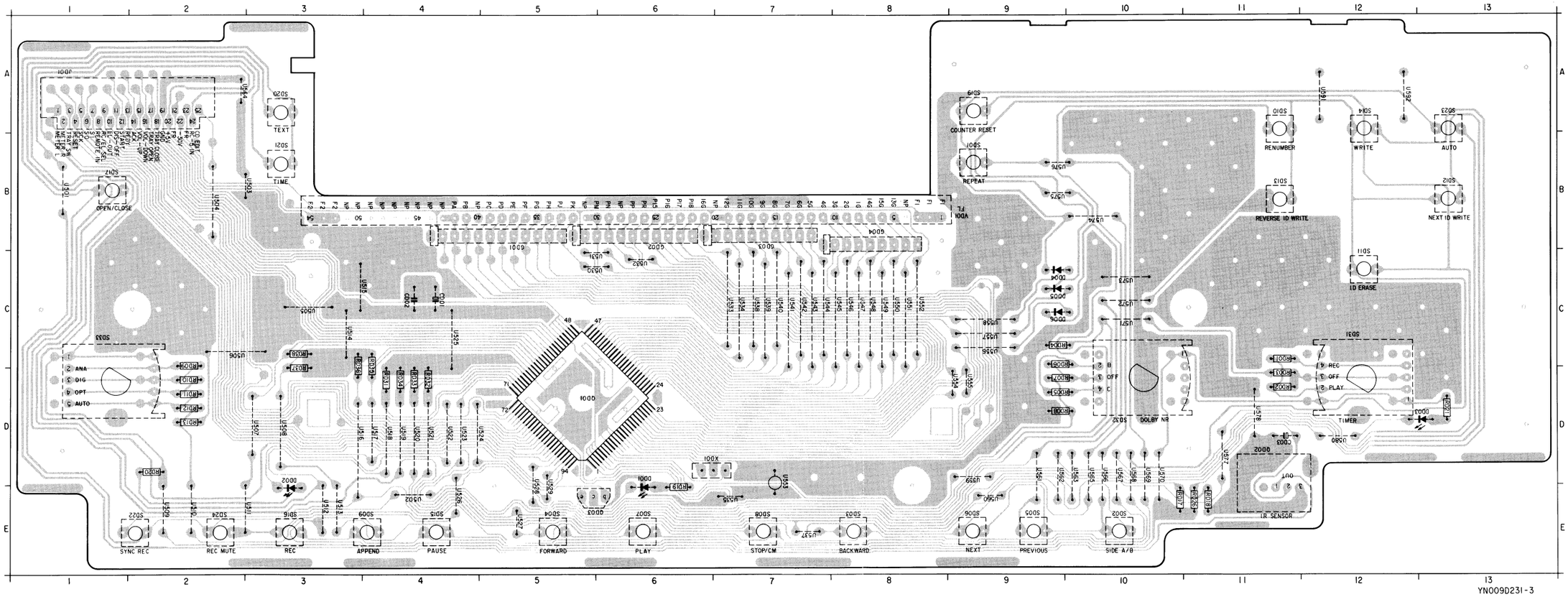

CD01	B6	RD08	C4
CD02	B5	RD09	D3
CD03	J19	RD10	D3
D004	F16	RD11	D3
D005	F17	RD12	D4
D006	F18	RD13	D4
DD01	J15	RD17	B5
DD02	J14	RD18	C5
DD03	J14	RD19	I15
GD01	G13	RD20	I14
GD02	E13	RD21	I14
GD03	D13	RD26	I19
GD04	B13	RD31	F5
JD01-1	E2	RD32	F5
JD01-10	H21	RD33	G5
JD01-11	H21	RD34	G5
JD01-12	G2	RD35	G5
JD01-13	G2	RD36	G5
JD01-14	G2	RD37	G5
JD01-15	H21	RD38	H5
JD01-16	I21	SD01	G16
JD01-17	I21	SD02	H16
JD01-18	I21	SD03	H16
JD01-19	H2	SD04	I16
JD01-2	F2	SD05	I16
JD01-20	H2	SD06	J16
JD01-21	H2	SD07	J16
JD01-22	H2	SD08	K16
JD01-23	H2	SD09	G17
JD01-24	I21	SD10	H17
JD01-25	H2	SD11	H17
JD01-3	F2	SD12	I17
JD01-4	F2	SD13	I17
JD01-5	F2	SD14	J17
JD01-6	H21	SD15	J17
JD01-7	F2	SD16	K17
JD01-8	G2	SD17	G18
JD01-9	G2	SD19	H18
QD01	B7	SD20	I18
QD02	J20	SD21	I18
QD03	K15	SD22	J18
RD01	B3	SD23	J18
RD02	B3	SD24	K18
RD03	B3	SD31	B2
RD04	C4	SD32	C2
RD05	C3	SD33	D2
RD06	C3	VD01	A13
RD07	C3	XD01	J6

TRAY WIRE CONNECTION, SERVO PCB (PM03)

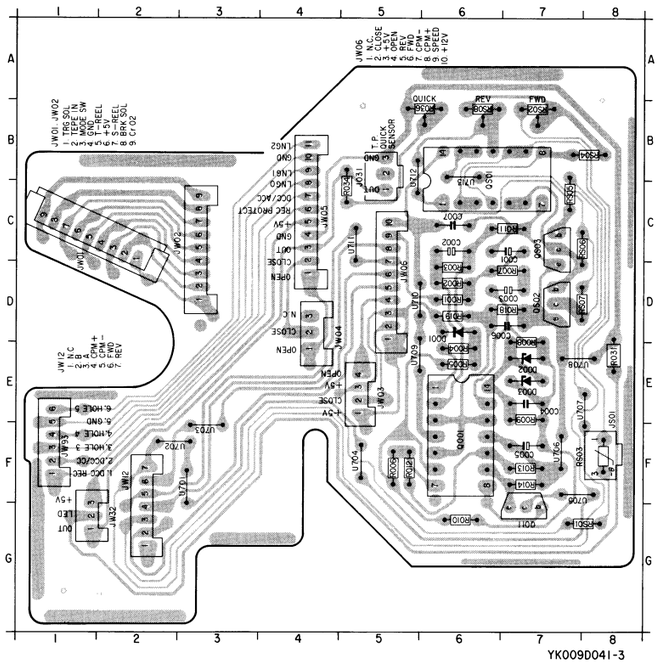

C001	C7	R008	E7
C002	C6	R009	E7
C003	D7	R010	G6
C004	E7	R011	C7
C005	F7	R012	F5
C006	D7	R013	F7
C007	C6	R014	F7
D001	D6	R018	D7
D002	E7	R019	D6
D003	E7	R031	E8
J031	B5	R034	C5
JS01	F8	R036	B6
JW01	C1	RS01	G8
JW02	C3	RS02	B7
JW03	E5	RS03	F8
JW04	D4	RS04	B8
JW05	C4	RS05	C7
JW06	D5	RS06	C7
JW12	F2	RS07	D7
JW32	G1	RS08	B6
JW93	F1	U701	F3
Q001	F6	U702	F2
Q011	G7	U703	F3
QS01	B6	U704	F5
QS02	D7	U705	F7
QS03	C7	U706	F7
R001	D6	U707	E8
R002	D6	U708	E7
R003	D6	U709	E5
R004	E6	U710	D5
R005	E6	U711	C5
R006	F5	U712	B5
R007	D7	U713	B6

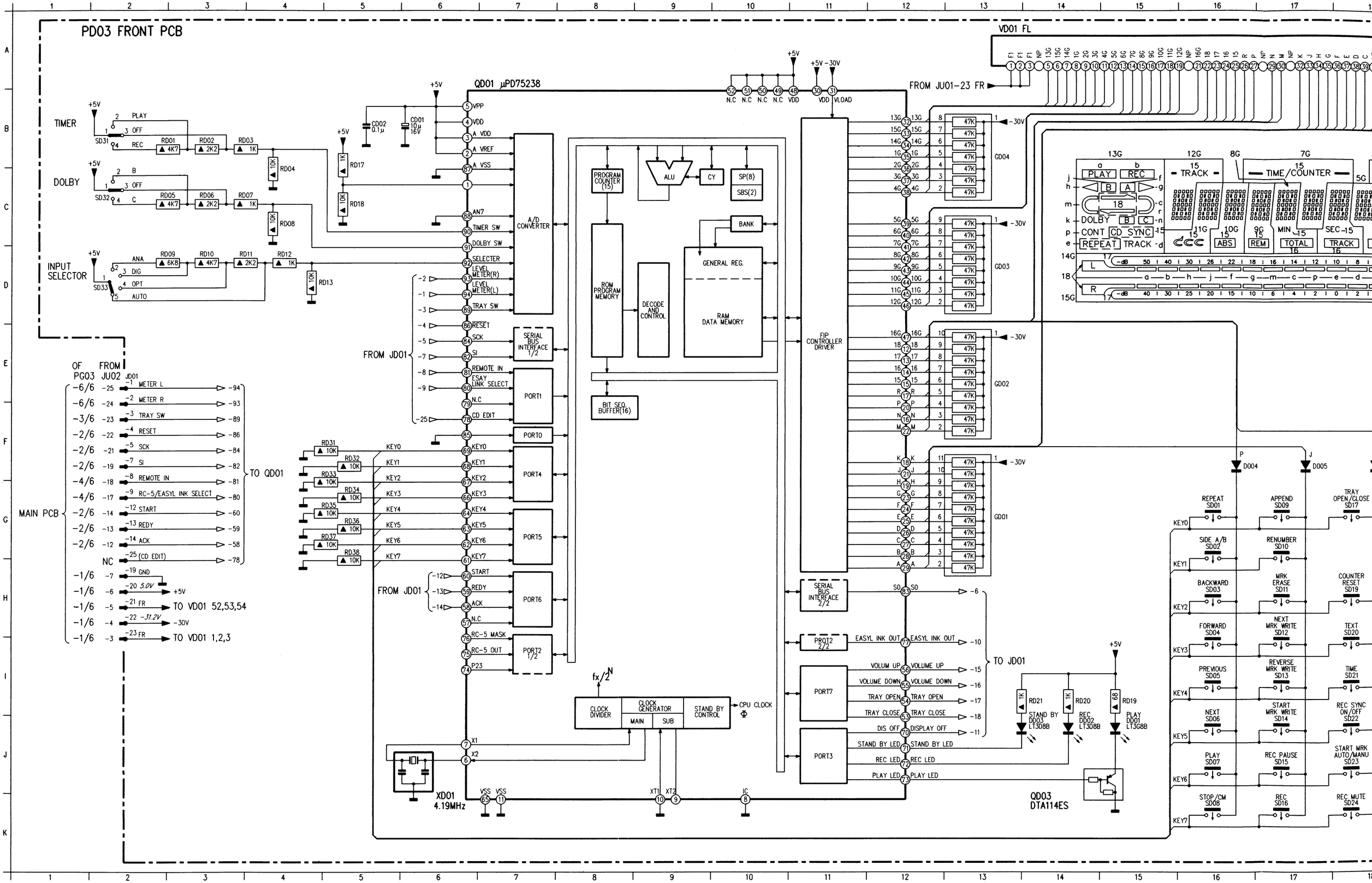
PD03 FRONT PCB
TIMER
DOLBY
INPUT SELECTOR
QD01 µPD75238
A/D CONVERTER
SERIAL BUS INTERFACE 1/2
PORT1
PORT0
PORT4
PORT5
PORT6
PORT2 1/2
FROM JD01
PROGRAM COUNTER (15)
ALU
CY
SP(8)
SBS(2)
BANK
GENERAL REG.
RAM DATA MEMORY
ROM PROGRAM MEMORY
DECODE AND CONTROL
BIT SEQ. BUFFER(16)
FIP CONTROLLER DRIVER
SERIAL BUS INTERFACE 2/2
PROT2 2/2
PORT7
PORT3
CLOCK DIVIDER
CLOCK GENERATOR
MAIN
SUB
STAND BY CONTROL
CPU CLOCK
XD01 4.19MHz
QD03 DTA114ES
FROM JU01-23 FR
VD01 FL
TO JD01
TO QD01
MAIN PCB
OF PG03
FROM JU02
TO VD01 52,53,54
TO VD01 1,2,3
TIME/COUNTER
TRACK
REPEAT
APPEND
TRAY OPEN/CLOSE
SIDE A/B
RENUMBER
BACKWARD
MRK ERASE
COUNTER RESET
FORWARD
NEXT MRK WRITE
TEXT
PREVIOUS
REVERSE MRK WRITE
TIME
NEXT
START MRK WRITE
REC SYNC ON/OFF
PLAY
REC PAUSE
START MRK AUTO/MANU
STOP/CM
REC
REC MUTE

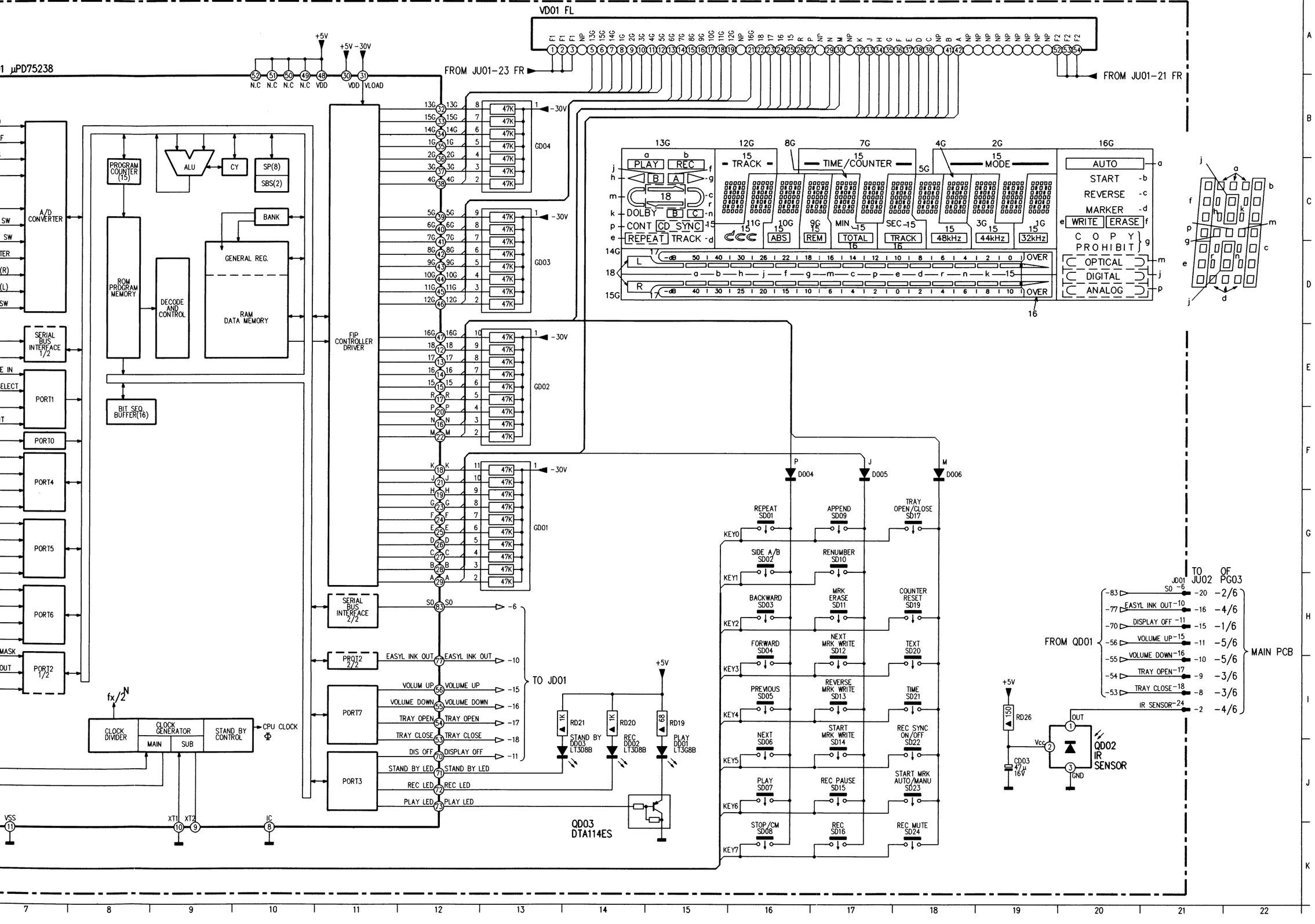

CD01	C4	U509	E2
CD02	C4	U510	E2
CD03	D11	U511	E3
DD01	E6	U512	E3
DD02	E3	U513	E3
DD03	D13	U514	C3
DD04	C9	U515	C3
DD05	C9	U516	D3
DD06	C9	U517	D4
DS21	B3	U518	D4
GD01	B5	U519	D4
GD02	B6	U520	D4
GD03	B7	U521	D4
GD04	B8	U522	D4
JD01	A1	U523	D4
QD01	D5	U524	D4
QD02	D11	U525	C4
QD03	E5	U526	E4
RD01	C11	U527	E5
RD02	D11	U528	D5
RD03	D11	U529	D5
RD04	C9	U530	C5
RD05	D9	U531	C5
RD06	C9	U532	C6
RD07	D9	U533	C7
RD08	D9	U534	C7
RD09	D2	U535	E7
RD10	D2	U537	E7
RD11	D2	U538	C7
RD12	D2	U539	C7
RD13	D2	U540	C7
RD17	E10	U541	C7
RD18	E11	U542	C7
RD19	E6	U543	C7
RD20	D2	U544	C7
RD21	D13	U545	C8
RD26	E11	U546	C8
RD35	C4	U547	C8
RD36	C3	U548	C8
RD37	C3	U549	C8
RD38	C3	U550	C8
SD01	B9	U551	C8
SD02	E10	U552	C8
SD03	E8	U553	D7
SD04	E5	U554	D9
SD05	E9	U555	D9
SD06	E9	U556	C9
SD07	E6	U557	C9
SD08	E7	U558	C9
SD09	E4	U559	D9
SD10	A11	U560	E9
SD11	C12	U561	D9
SD12	B13	U562	D9
SD13	B11	U563	D10
SD14	A12	U564	A2
SD15	E4	U565	D10
SD16	E3	U566	D10
SD17	B1	U567	D10
SD19	A9	U568	D10
SD20	A3	U569	D10
SD22	E2	U570	D10
SD23	A13	U571	C10
SD24	E2	U572	C10
SD31	C12	U573	C10
SD32	D10	U574	B10
SD33	C1	U575	B9
U501	B1	U576	B9
U502	E4	U577	D11
U503	B2	U578	D11
U504	B2	U580	D12
U505	C3	U591	A12
U506	C2	U592	A12
U507	D3	VD01	B5
U508	D3	XD01	D6

GB

HEAD, DECK MECHANISM AND THEIR INTERFACES

DCC head

Heads used in the DCC are called a thin film head and made by repeating 20 times or more of multiple evaporations and spatterings as in fabricating ICs.

Accordingly, the heads have different features and characteristics from those of coil winding type heads used in conventional Analog cassette tape decks.

1. Playback head uses a magnetic resistance element (MR element).
2. The MRE needs magnetic bias to obtain its maximum output. So, a bias conductor which is equivalent to a coil to develop the magnetic bias is installed.
3. Moreover, analog playback head needs a magnetic feedback to increase linearity. This is realized by giving a magnetic field proportional to the MRE output from a bias conductor.

Terminals and structure of the DCC head are shown in the Fig. 1.

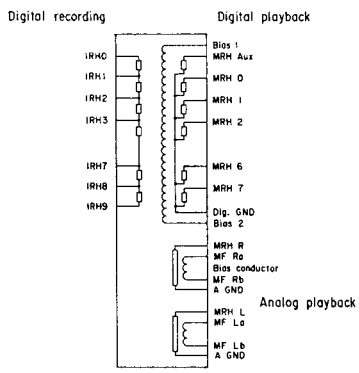

Fig. 1 DCC HEAD TERMINAL LIST AND THE STRUCTURE

Cautions of handling of heads

The heads are susceptible to electrostatic voltage (about DC150V).
The heads are protected from external electrostatic charging by connecting the head flexible cables to the Read/Write PCB.
When disconnecting the cables, always place the deck on a bench with required electrostatic discharging measures taken and wear an electrostatic discharging band.
Moreover, always mount the short-clip on the flexible cables removed.

The heads are also susceptible to strong external magnetic field and the analog output may be affected. Do not use a head demagnetizer, etc.

WARNING

DO NOT USE A DEMAGNETIZER CASSETTE.

AUTOREVERSE CASSETTE DECK

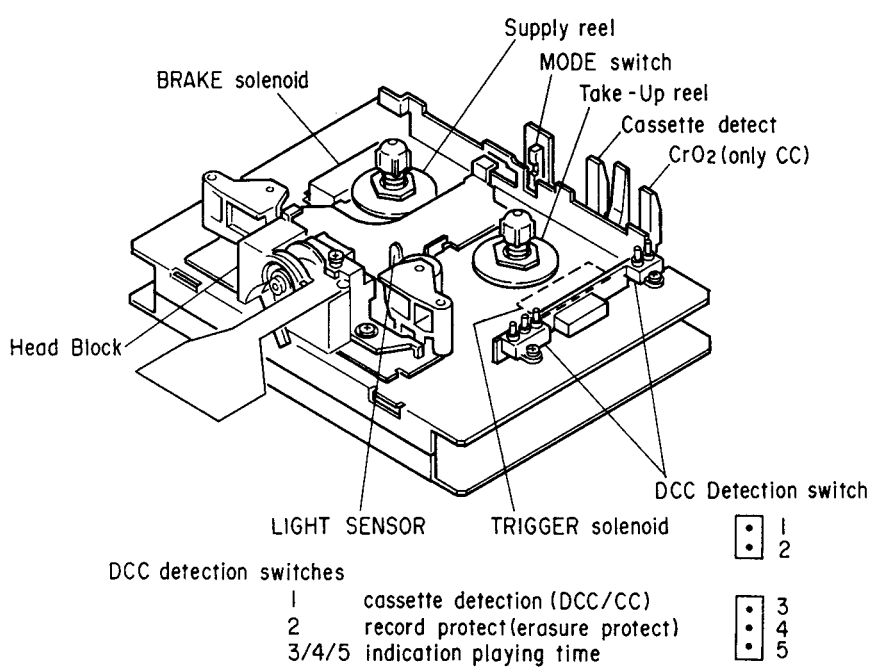

DCC detection switches

1	cassette detection (DCC/CC)
2	record protect (erasure protect)
3/4/5	indication playing time

Pairing with Read/Write PCB

For each head,

- setting for amount of bias (for both analog and digital)
- feedback adjustment (only for analog playback)

are required.

That is, a pairing is needed for heads and R/W PCB to which the heads are connected. So, when the R/W PCB is replaced or the head is replaced, potmeters (trimming resistors) on the R/R/ PCB must be readjusted.

The adjustment requires dedicated adjustment jigs.

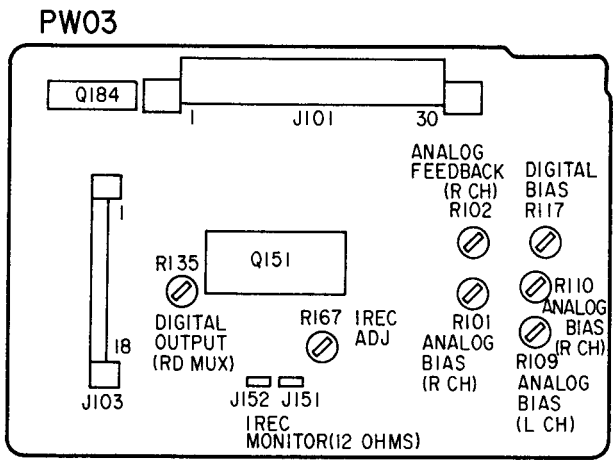

Fig. 2

Read/Write PCB adjustment

As previously stated, a pairing adjustment has been made for specified heads and the R/W PCB in the factory in preceding the shipment. So, following adjustments are not necessary in service stations PCB a first time.
(Perform replacement of deck, heads, R/W PCB and tray loader as one unit.)

Adjustment with dedicated jigs in the factory

1. Analog playback head bias adjustment (R109:Lch, R110:Rch)
2. Analog playback head feedback adjustment (R101:Lch, R102:Rch)
3. Digital playback head bias adjustment (R117)
4. Digital playback head playback output level adjustment (R135)
5. Digital record head record current adjustment (R167)

1. and 2. determine distortion value in the analog playback.

2. determines frequency response in the same way. Accordingly, tampering the trimming resistors for 1. and 2. will deteriorate those characteristics. These operations can be monitored at Ana L and R terminals on the R/W/ PCB.

3. will be replaced with a fixed resistor in near future. Since the digital output has only two values 1 or 0, minor waveform distortion can be accepted.

4. is the adjustment for an attenuator to develop a specified voltage for sending a signal to the signal process circuit (DCC PCB). This can be used to test a correct output is obtained from the head. This operation can be monitored at RMUX terminal on the R/W PCB.

5. is required to record signals in a constant depth on a tape.
For each head, a recommended record current exists individually. (140 ~ 180mA) If this value is not adjusted correctly, the RD MUX value in 4 does not match between a self recorded tape and prerecorded tape. Moreover, if a recording is made at a deep layer with a high value, the previous records can not be erased when an overwrite recording is made at that area later, and error rate will be increased at that area.

Check points for R/W PCB

Under normal operations, the following signals can be observed out of R/W PCB connectors.

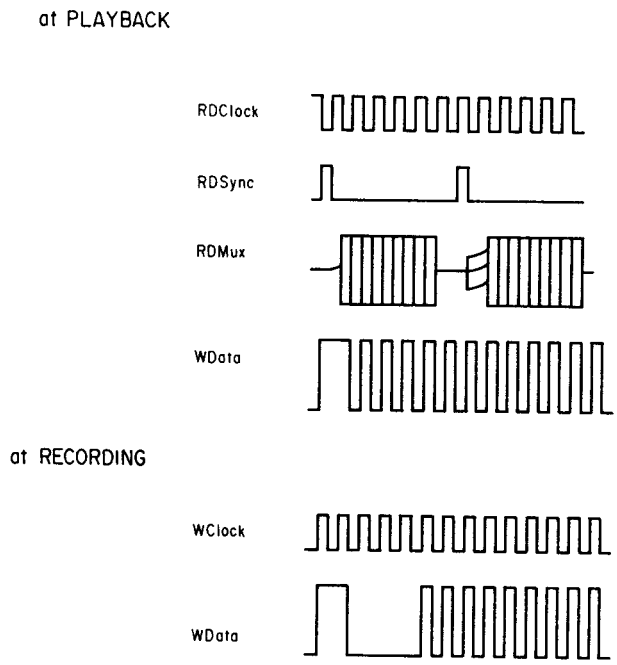

Fig. 3

The actual waveforms are shown photo 1 to 2.

At PLAYBACK **Photo 1**

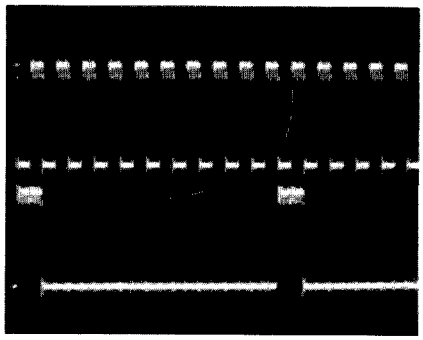

Up: Rdclock
Dn: Rdsync
X : 0.5μS/div
Y : 0.2V/div

At RECORDING **Photo 2**

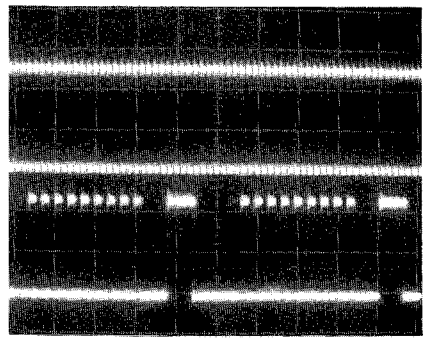

Up: Wdclock
Dn: Wdata
X : 2μS/div
Y : 0.2V/div

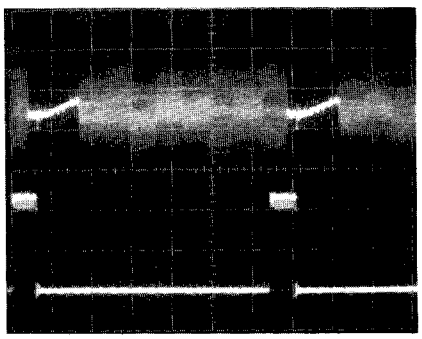

Up: Rdclock
Dn: Rdsync
X : 0.5μS/div
Y : 50mV/div(Up)
Y : 0.2V/div(Dn)

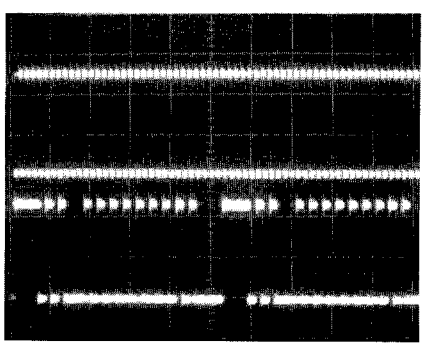

Up: Wclock
Dn: Wdata
X : 2μS/div
Y : 0.2V/div

DCC capstan servo

Record:

DDSP IC on the DCC PCB continuously outputs a rectangular waveform of 24kHz, 50% duty. This can be monitored at check point on the PCB, #3 of J411. With this rectangular waveform the capstan motor rotates at a specified speed to record signals on a tape.

DCC playback:

Digital signal from the head is read, and speed deviation is calculated and output as a variation of duty at the speed terminal. The servo circuit on the tray PCB cycle changes the output into a drive force for the capstan motor, thereby performing the control.

Since the capstan motor is of electronic governor type, it has four terminals, +, –, A, and B.

Analog playback:

Continunously develops a fixed rectangular waveform signal of 24kHz, 50% duty as in the record mode.

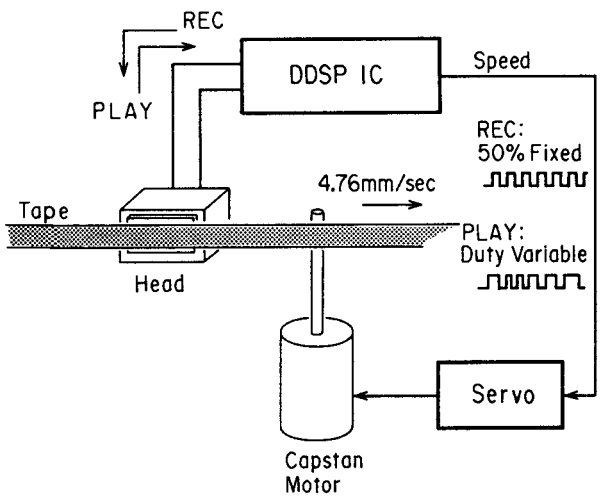

DCC capstan servo system

The actual waveforms are shown photo 3.

SPEED SIGNAL **Photo 3**

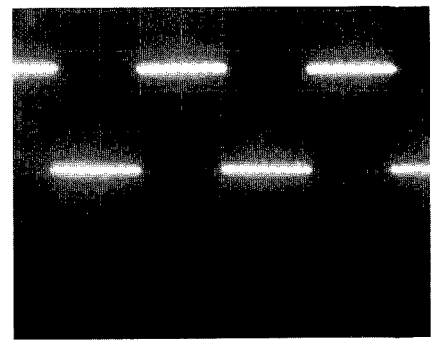

At RECORDING
X : 10μS/div
Y : 0.2V/div

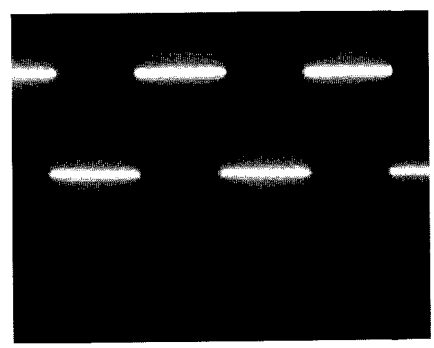

At normal PLAYBACK
X : 10μS/div
Y : 0.2V/div

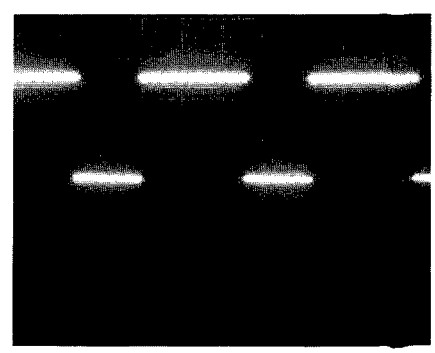

At PLAYBACK with OFFSET
X : 10μS/div
Y : 0.2V/div

ELECTRICAL MEASUREMENTS AND ADJUSTMENTS

Tape speed adjustment (PM03 PCB)

1. Connect frequency counter to analog L- or R-output.
2. Playback on side A 3.15kHz(3kHz) signal from wow & flutter test cassette.
3. Adjust RS02 for frequency reading between 3145Hz(2990Hz) and 3155Hz(3010Hz).
4. Play back 3.15kHz(3kHz) at side B.
5. Adjust RS08 for reading between 3145Hz(2990Hz) and 3155Hz(3010Hz).

NOTE:

If the adjustment of the unit is not made precisely and rotation error higher than a specified value occurs, the servo is not locked during playback of a DCC tape and the signals will be muted. This condition (locked or not locked) can be monitored at speed terminal (#3) of JW06. (Refer to photo.) Under normal locked condition, deflection of the speed signal is less than 0.5mS.

Quick sensor adjustment (PM03 PCB)

1. Connect DC-voltmeter between 3-J031 and ground.
2. Use CC Maxwell UDI90.
   (Bad tape with respect to light reflection)
3. Wind tape until leader is passed.
4. Press PLAY.
5. Adjust R036 for DC reading of 1V.
   If don't get 1V at the maximum adjustment, leave the maximum point.

Analog playback frequency response adjustment (PG03 PCB)

1. Play back 40Hz, 1kHz, 14kHz signals on test tape TCC 183C (–24dB).
2. Adjust each trimming resistor R645(L) and R646(R) so that 40Hz signal level shows within 0 ~ 1dB from 1kHz reference level.
3. Adjust each trimming resistor R643(L) and R644(R) so that 14kHz signal level shows within 0 ~ 1dB from 1kHz reference level.

Playback output adjustment (Dolby) (PG03 PCB)

1. Connect AC-voltmeter between 1-J601 and 2-J601 for R-channel and 3-J601 and 2-J601 for L-channel.
2. Playback Dolby test cassette.
3. Adjust R633 (L) and R634 (R) for AC reading of 389 mV.

Level meter sensitivity adjustment (PG03 PCB)

1. Connect a 1kHz (–12dB) digital signal (44.1kHz) to the digital terminal.
2. Set unit to REC PAUSE mode.
3. Adjust each trimming resistor RL05(L), and RL06(R) until meter lights up –10dB point then lights down –12dB point.
4. After the above adjustment, playback the Dolby Test Tape, check the meter lights on 0dB point.

NOTE:

If the meter lights on except 0dB point, adjust again from the first step.

VCO free run frequency adjustment (PZ03 PCB)

1. Turn the power switch ON. (Don't input any digital signal.)
2. Make sure the frequency on the test point J442, and adjust the trimming resistor R455 to 7.5MHz ± 0.1MHz.

NOTE:

If this adjustment is not performed properly, the sync signal is not locked with an outside one.
This frequency must be checked carefully when replacing the IC Q441, Q443 and Q444.

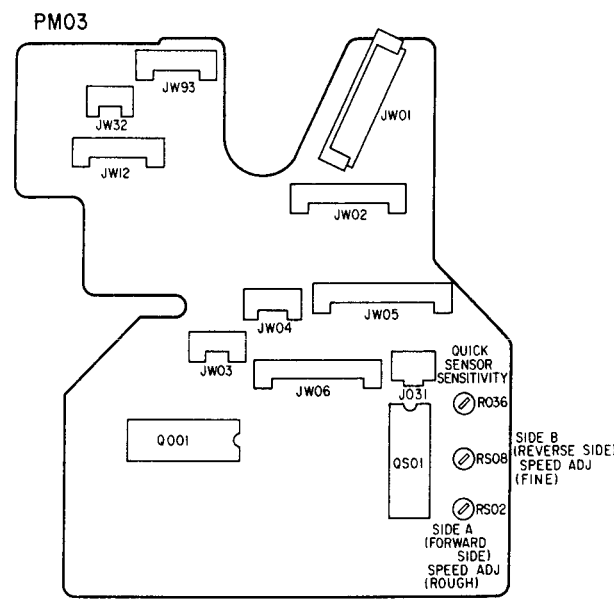

(NL)

DE KOPPEN, HET DECKMECHANISME EN INTERFACES

DCC-kop

De koppen van de DCC zijn van het dunne film-type en worden geproduceerd door minstens 20 veelvuldige verdampingen en besprenkelingen, zoals bij de produktie van ICs.

Deze koppen hebben daardoor andere kenmerken en technische gegevens dan spoelvormige koppen, zoals die worden gebruikt in gewone analoge cassettedecks.

1. De weergavekop heeft een magnetisch weerstandselement (MRE).
2. Opdat dit MRE haar maximale vermogen kan bereiken, is er magnetische voorspanning vereist. Een voorspanningskonduktor, equivalent aan een spoel, is geïnstalleerd om deze magnetische voorspanning te produceren.
3. Bovendien is er voor een analoge weergavekop een magnetische terugkoppeling vereist om de linearitеit te verhogen. Een voorspanningskonduktor wekt hiervoor een magnetisch veld op dat proportioneel is aan het vermogen van het MRE.

Klemmen en structuur van de DCC-kop worden getoond in Afb. 1.

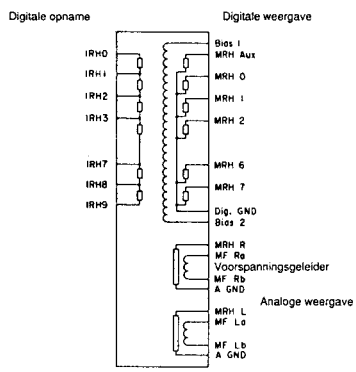

Afb. 1 KLEMMEN EN STRUCTUUR VAN EEN DCC-KOP

Voorzorgsmaatregelen bij behandeling van de koppen

De koppen zijn gevoelig voor elektrostatische spanning (ongeveer 150V gelijkstroom).
De koppen worden beveiligd tegen externe elektrostatische ladingen door de kabels van de koppen aan de Lees/Schrijf-printplaat te verbinden. Wanneer u de soepele kabels losmaakt, plaats het deck altijd op een bank nadat u zich elektrostatisch ontladen heeft en een elektrostatische ontladingsband heeft aangetrokken.
Breng bovendien altijd de kortsluitpennen aan op de losgemaakte soepele kabels.

De koppen zijn ook gevoelig voor sterke externe magnetische velden. Gebruik geen demagnetiseercassette voor de koppen o.i.d. aangezien dit het analoge vermogen kan beïnvloeden.

WAARSCHUWING

GEBRUIK GEEN DEMAGNETISEERCASSETTE.

AUTOREVERSE CASSETTEDECK

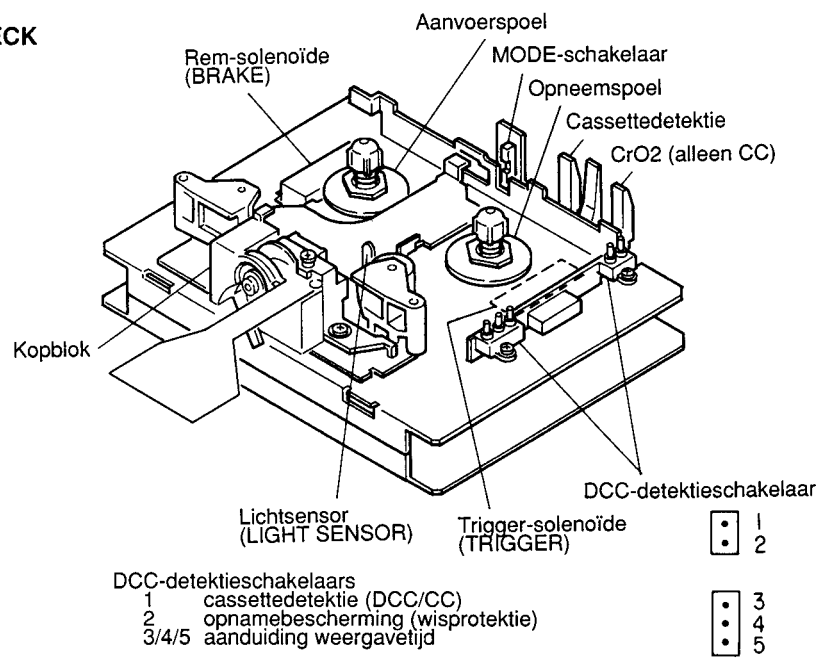

DCC-detektieschakelaars
1 cassettedetektie (DCC/CC)
2 opnamebescherming (wisprotektie)
3/4/5 aanduiding weergavetijd

GB

PG03

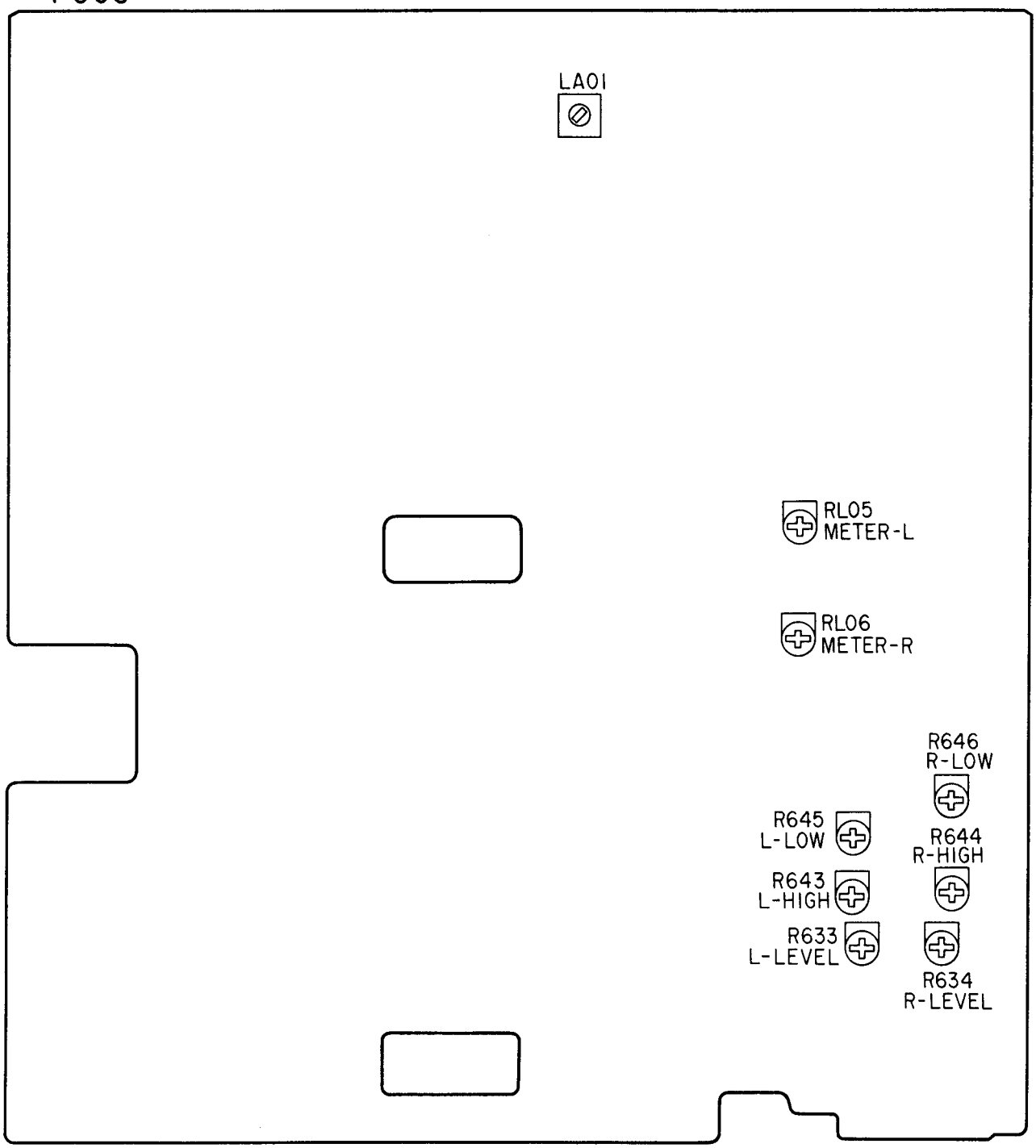
LA01
RL05
METER-L
RL06
METER-R
R646
R-LOW
R645
L-LOW
R644
R-HIGH
R643
L-HIGH
R633
L-LEVEL
R634
R-LEVEL

NL

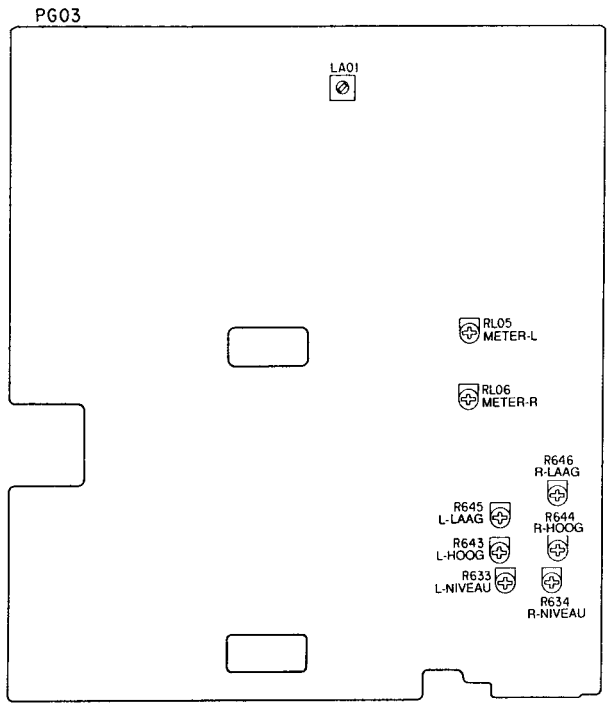
PG03
LA01
RL05
METER-L
RL06
METER-R
R646
R-LAAG
R645
L-LAAG
R644
R-HOOG
R643
L-HOOG
R633
L-NIVEAU
R634
R-NIVEAU

D

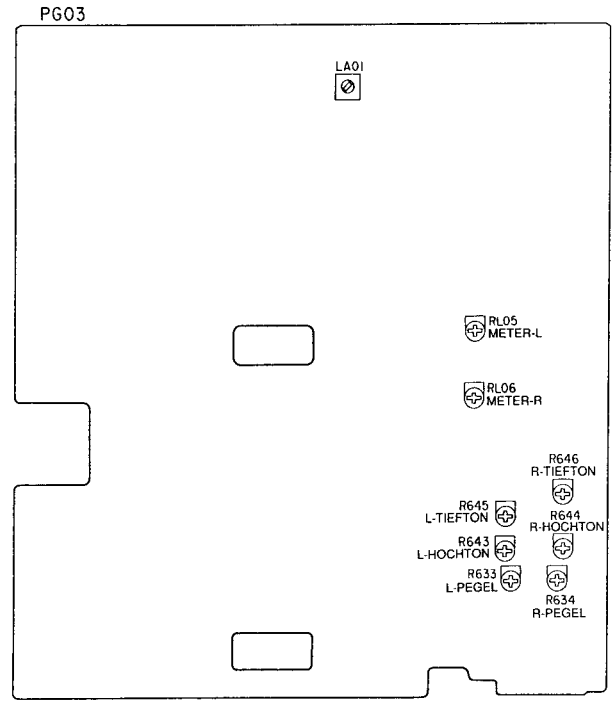
PG03
LA01
RL05
METER-L
RL06
METER-R
R646
R-TIEFTON
R645
L-TIEFTON
R644
R-HOCHTON
R643
L-HOCHTON
R633
L-PEGEL
R634
R-PEGEL

F

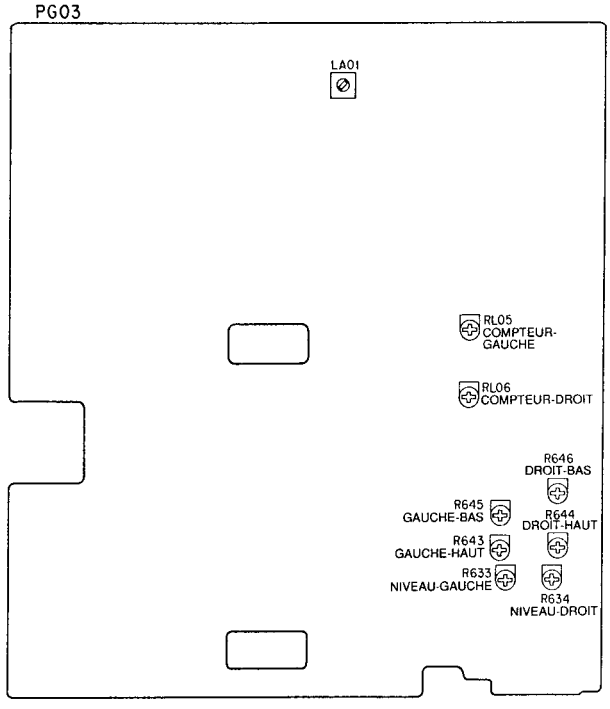
PG03
LA01
RL05
COMPTEUR-
GAUCHE
RL06
COMPTEUR-DROIT
R646
DROIT-BAS
R645
GAUCHE-BAS
R644
DROIT-HAUT
R643
GAUCHE-HAUT
R633
NIVEAU-GAUCHE
R634
NIVEAU-DROIT

I

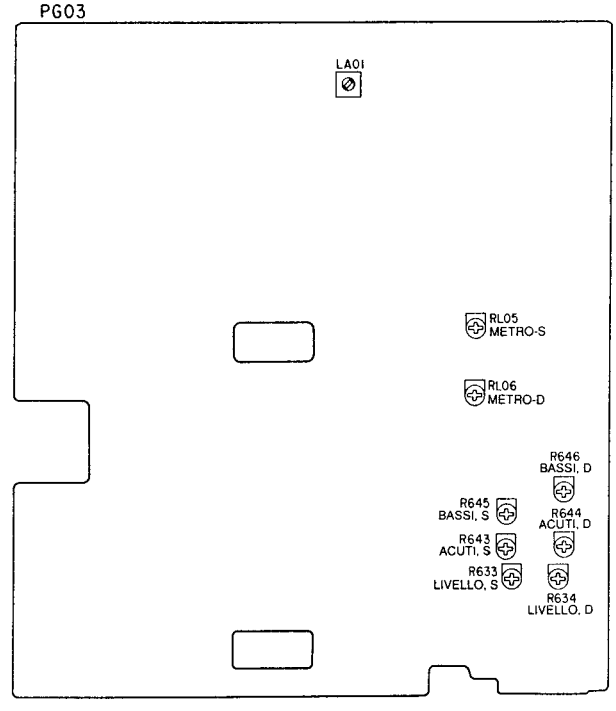
PG03
LA01
RL05
METRO-S
RL06
METRO-D
R646
BASSI, D
R645
BASSI, S
R644
ACUTI, D
R643
ACUTI, S
R633
LIVELLO, S
R634
LIVELLO, D

Koppeling met de Lees/Schrijf-printplaat (R/W-printplaat)

Voor elke kop, zijn

- instelling voor vermogen voorspanning (zowel voor analoog als digitaal)
- regeling terugkoppeling (alleen voor analoge weergave) vereist.

Dit betekent dat er een koppeling vereist is voor de koppen en de R/W-printplaat waarop de koppen zijn aangesloten. Wanneer dus de R/W-printplaat of de kop worden vervangen, moeten de potentiometers (regelweerstanden) op de R/R-printplaat worden bijgeregeld.
Voor deze regeling zijn speciale regelmallen vereist.

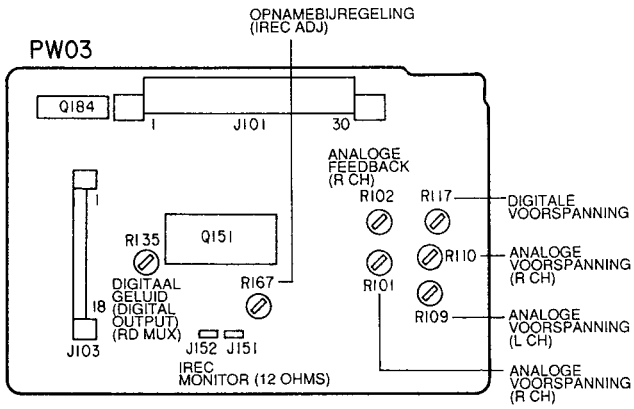

Afb. 2

Regeling van de Lees/Schrijf-printplaat

Zoals vermeld, werd er in de fabriek een koppelregeling voor de koppen en R/W-printplaat gemaakt. De volgende regelingen zijn bijgevolg niet noodzakelijk wanneer de printplaat voor de eerste maal een onderhoudsbeurt krijgt. (Vervang het deck, de koppen, de R/W-printplaat en de ladelader in één deel.)

Regeling met speciale mallen in de fabriek

1. Regeling van de voorspanning van een analoge weergavekop (R109:Lch, R110:Rch)
2. Regeling van de terugkoppeling van een analoge weergavekop (R101:Lch, R102:Rch)
3. Regeling van de voorspanning van een digitale weergavekop (R117)
4. Regeling van het weergave-uitgangsvermogen van een digitale weergavekop (R135)
5. Regeling van de opnamestroom van een digitale opnamekop (R167)

   1. en 2. leveren de vervormingswaarde op voor analoge weergavve.

   2. levert op dezelfde manier de frekwentierespons op. Bijgevolg zullen deze punten verslechteren als u aan de regelweerstanden voor 1. en 2. zit. U kan dit monitoren aan de Ana L en R-klemmen op de R/W-printplaat.

   3. wordt binnenkort vervangen door een vaste weerstand.

   Aangezien de digitale uitgang uit slechts twee waarden bestaat (1 of 0), is een kleine vervorming in de golfvorm aanvaardbaar.

   4. is de regeling opdat een attenuator een bepaald voltage zou bereiken om een signaal naar het signaalverwerkingscircuit (DCC printplaat) te sturen. Dit kan worden gebruikt om te testen of de kop wel een goed resultaat levert. U kan deze bewerking monitoren op de RMUX-klem op de R/W-printplaat.

   5. is vereist om signalen in een konstante diepte op een band op te nemen.
   Elke kop heeft zijn eigen aanbevolen opnamestroom. (140 ~ 180mA). Als deze waarde niet naar behoren wordt ingesteld, komt de waarde van RD MUX in 4 niet overeen bij een zelf opgenomen en een vooropgenomen tape.
   Als de opname dan bovendien op een diepe laag met een hoge waarde wordt gemaakt, kunnen de vorige opnamen niet worden gewist als er nadien een overschrijffout op die plaats gebeurt. De foutenmarge voor die plaats wordt verhoogd.

Kontrolepunten voor de R/W-printplaat

Bij normale bediening, kan u de volgende signalen opmeten aan de klemmen van de R/W-printplaat.

bij WEERGAVE

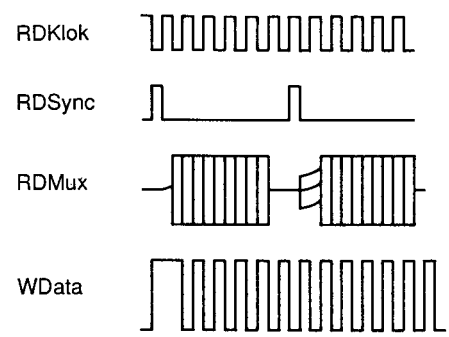

bij OPNAME

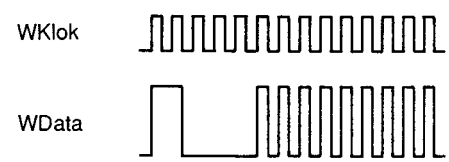

Afb. 3

De echte golfvormen vindt u op de volgende bladzijde.

Bij WEERGAVE **Foto 1**

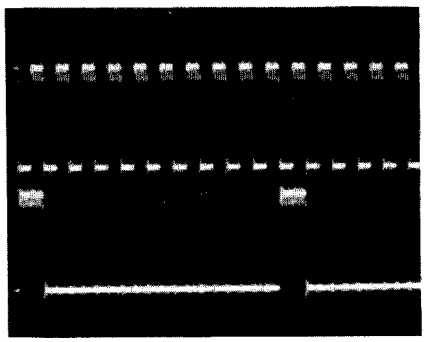

Omhoog : Rdklock
Omlaag : Rdsync
X : 0.5µS/div
Y : 0.2V/div

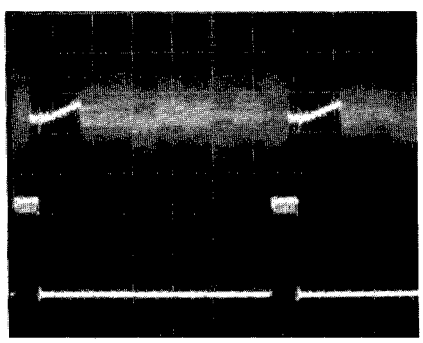

Omhoog : Rdklock
Omlaag : Rdsync
X : 0.5µS/div
Y : 50mV/div(Omhoog)
Y : 0.2V/div(Omlaag)

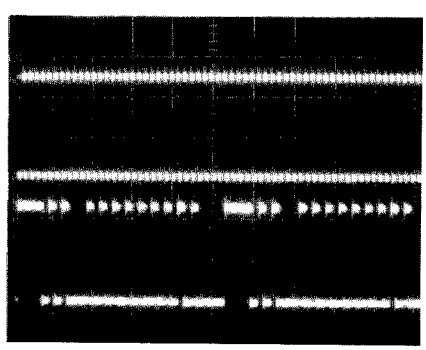

Omhoog : Wklock
Omlaag : Wdata
X : 2µS/div
Y : 0.2V/div

Bij OPNAME **Foto 2**

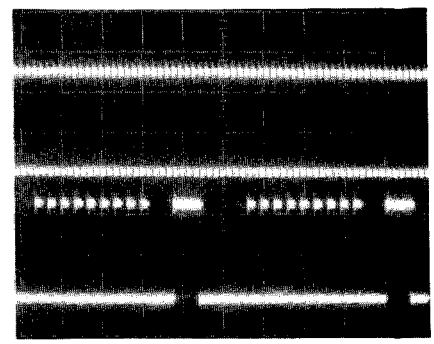

Omhoog : Wdclock
Omlaag : Wdata
X : 2µS/div
Y : 0.2V/div

DCC capstan servo

Opname:

De DDSP IC op de DCC printplaat geeft continu een rechthoekige golfvorm van 24kHz weer, 50% belast. U kan dit monitoren op het kontrolepunt op de printplaat, #3 van J411. Bij deze rechthoekige golfvorm draait de capstanmotor aan een bepaalde snelheid om signalen op band op te nemen.

DCC weergave:

Het digitale signaal van de kop wordt gelezen en de snelheidsafwijking wordt berekend en als een variatie in belasting naar de snelheidsklem gestuurd. Het servocircuit van de printplaat van de lade gebruikt deze waarde voor de aandrijving van de capstanmotor, en doet dus ook dienst als controle.
Aangezien de capstanmotor van het elektronische regulateurstype is, zijn er vier klemmen: +, –, A en B.

Analoge weergave:

Ontwikkelt continu een vast rechthoekig golfvormsignaal van 24kHz, 50% belast zoals in de opnamestand.

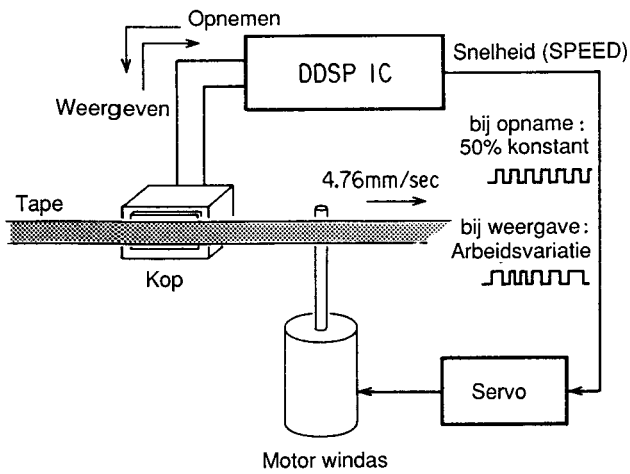

DCC capstan servosysteem

De echte golfvormen vindt u op de volgende bladzijde.

SNELHEIDSSIGNAAL **Foto 3**

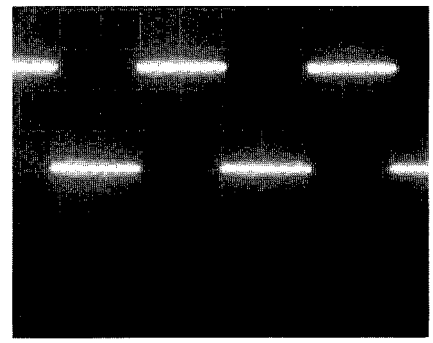

Bij OPNAME
X : 10µS/div
Y : 0.2V/div

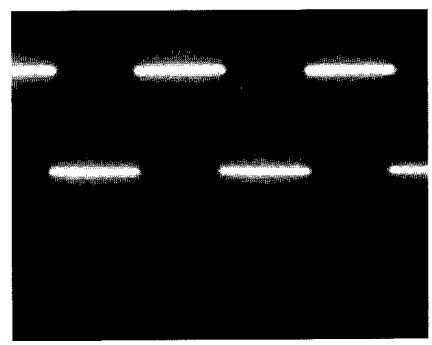

Bij gewone WEERGAVE
X : 10µS/div
Y : 0.2V/div

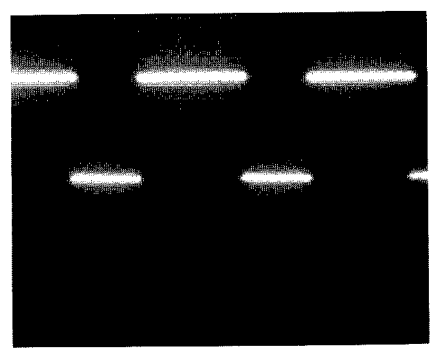

Bij WEERGAVE met OFFSET
X : 10µS/div
Y : 0.2V/div

ELEKTRISCHE METINGEN EN REGELINGEN

Regeling van de bandsnelheid (PM03 PCB)

1. Sluit de frekwentieteller aan op de analoge L- of R-uitgang.
2. Geef het 3.15kHz (3kHz) signaal op kant A van de wow & flutter testcassette weer.
3. Regel RS02 bij voor een frekwentie tussen 3145Hz (2990Hz) en 3155Hz (3010Hz).
4. Geef het 3.15kHz (3kHz) signaal op kant B weer.
5. Regel RS08 bij voor een frekwentie tussen 3145Hz (2990Hz) en 3155Hz (3010Hz).

OPMERKING:

Als de regeling van het toestel niet precies wordt uitgevoerd en er een rotatiefout plaats vindt die hoger is dan een bepaalde waarde, wordt de servo niet vastgezet bij weergave van een DCC-cassette en worden de signalen gedempt. U kan dit (beveiligd of niet-beveiligd) monitoren aan de snelheidsklem (#3) van JW06. (Zie foto.) Bij een normale beveiligde toestand is de afbuiging van het snelheidssignaal minder dan 0.5mS.

Regeling van de snelle sensor (PM03 PCB)

1. Sluit de DC-voltmeter aan op 3-J031 en de aarding.
2. Gebruik een CC Maxwell UDI90.
   (Tape die slecht is wat betreft de lichtweerkaatsing)
3. Draai de band door tot aan het begin van de tape.
4. Druk op weergave (PLAY).
5. Regel R036 op 1V gelijkstroom.
   Als u in de uiterste stand geen 1V krijgt, laat het dan in de uiterste stand staan.

Regeling van de frekwentierespons van analoge weergave (PG03 PCB)

1. Geef een signaal weer van 40Hz, 1kHz en 14kHz op de testcassette TCC 183C (–24dB).
2. Regel de regelweerstanden R645(L) en R646(R) tot u een signaalniveau van 40Hz krijgt binnen de 0 ~ 1dB van het referentieniveau van 1kHz.
3. Regel de regelweerstanden R643(L) en R644(R) tot u een signaalniveau van 14kHz krijgt binnen de 0 ~ 1dB van het referentieniveau van 1kHz.

Regeling van het weergavevermogen (Dolby) (PG03 PCB)

1. Sluit de AC-voltmeter aan op 1-J601 en 2-J601 voor het rechterkanaal en op 3-J601 en 2-J601 voor het linkerkanaal.
2. Geef de Dolby testcassette weer.
3. Regel R633 (L) en R634 (R) voor een wisselstroom van 389mV.

Regeling van de gevoeligheid van de niveaumeter (PG03 PCB)

1. Stuur een digitaal signaal (44.1kHz) van 1kHz (–12dB) naar de digitale klem.
2. Zet het toestel in de opnamepauzestand (REC PAUSE).
3. Regel de regelweerstanden RL05(L) en RL06(R) tot de meter tot –10dB naar boven en vervolgens –12dB naar beneden oplicht.
4. Geef de Dolby testcassette weer na de bovenstaande regeling en kontroleer dat de meter 0dB aangeeft.

OPMERKING:

Als de meter een andere waarde dan 0dB aangeeft, regel dan alles weer bij vanaf de eerste stap.

Regeling van de "VCO free run"-frekwentie (PZ03 PCB)

1. Schakel het toestel aan (ON). (Stuur geen digitaal signaal.)
2. Kontroleer de frekwentie op het kontrolepunt J442 en regel de regelweerstand R455 op 7.5MHz ± 0.1MHz.

OPMERKING:

Als u deze regeling niet naar behoren uitvoert, is het synchronisatiesignaal niet gekoppeld aan een extern signaal.
U moet deze frekwentie zorgvuldig kontroleren wanneer u de ICs Q441, Q443 en Q444 vervangt.

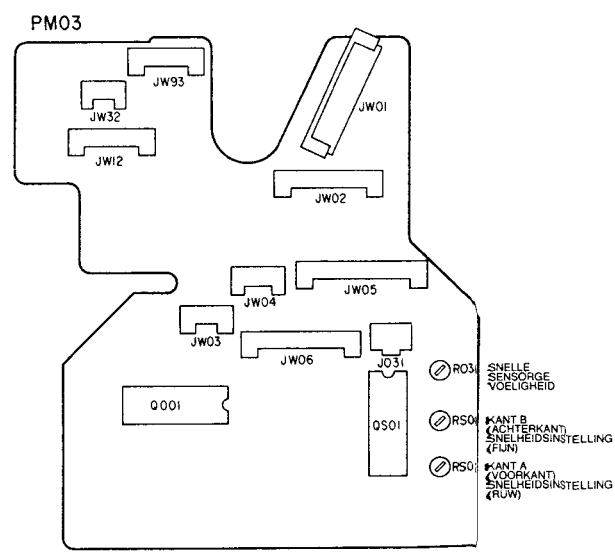

(F)

Tête, Mécanisme du lecteur et de leurs interfaces

Tête DCC

Les têtes utilisées dans le DCC s'appellent têtes à fine couche et sont obtenues en répétant 20 fois ou plus des évaporations multiples et des poses comme lors de la fabrication de cartes imprimées.

En conséquence, les têtes possèdent différentes propriétés et caractéristiques qui les diffèrent des têtes à bobine utilisées dans les lecteurs de cassette analogiques conventionnels.

1. La tête de lecture utilise un élément à résistance magnétique (élément MR).
2. Le MRE requiert une prémagnétisation afin d'obtenir une sortie maximum. Ainsi, un conducteur de prémagnétisation équivalent à une bobine est installé afin de développer la prémagnétisation.
3. En outre, la tête de lecture analogique exige une réalimentation magnétique pour améliorer la linéarité. Ceci est effectué en attribuant un champs magnétique proportionnel à la sortie à partir d'un conducteur de prémagnétisation.

Les bornes et la structure de la tête DCC sont indiquées sur la Fig. 1.

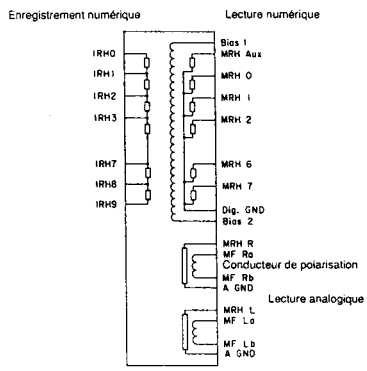

Fig. 1 LISTE ET STRUCTURE DE LA TETE DCC LIST

Précautions pour la manipulation des têtes

Les têtes sont susceptibles de générer une tension électrostatique (environ 150V CC).
Les têtes sont protégées contre les charges électrostatiques de l'extérieur par la connexion des câbles flexibles de la tête au PCB Lecture/écriture.
Lorsque vous déconnectez les câbles, placez toujours le lecteur sur un banc dont les valeurs électrostatiques ont été mesurées et utilisez une bande de déchargement électrostatique.
Aussi, montez toujours la pince courte sur les câbles flexibles enlevés.

Les têtes sont également susceptibles de générer des champs magnétiques puissants extérieurs et la sortie analogique peut en être affectée. N'utilisez pas un démagnétiseur de tête etc.

MISE EN GARDE

N'UTILISEZ PAS UNE CASSETTE DE DEMAGNETISATION DE TETE

LECTEUR CASSETTE AUTOREVERSE

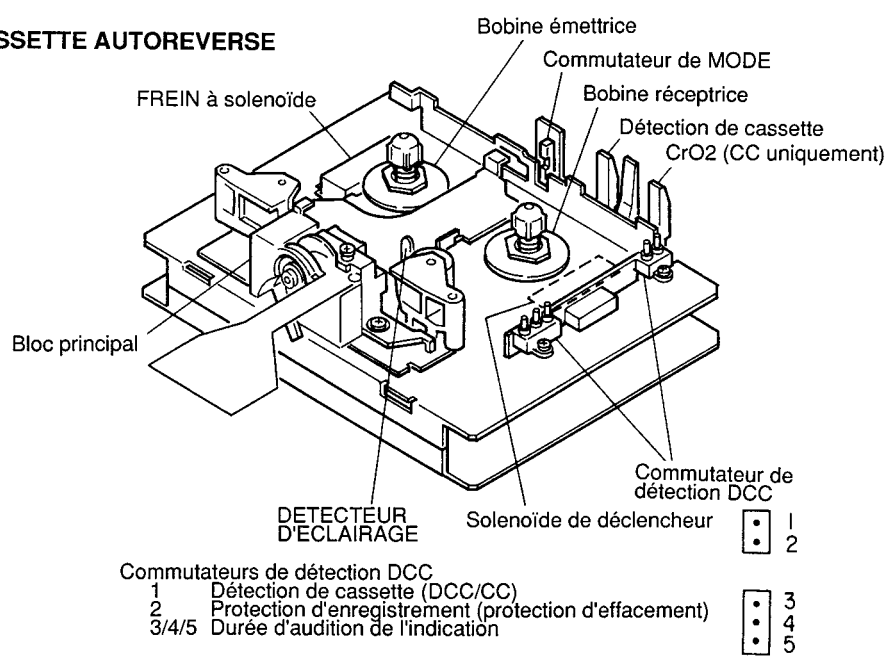

Accouplement du PCB Lecture/Ecriture PCB

Pour chaque tête

- un réglage de la quantité de prémagnétisation (analogique aussi bien que numérique)
- réglage de feedback (seulement pour la lecture en mode analogique)

sont requis.

C'est-à-dire, un accouplement des têtes et du PCB R/W auquel les têtes sont raccordées. Ainsi, pour remplacer ou le PCB R/W ou la tête, les potentiomètres (résisteurs d'ajustage) sur le PCB R/R/ doivent être réajustés.
L'ajustage requiert des calibres de réglage dédiés.

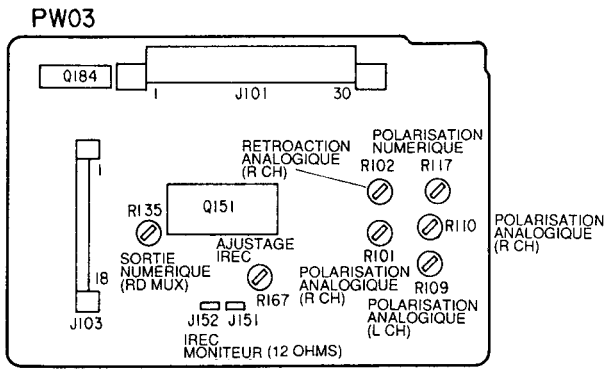

Fig. 2

Ajustage du PCB Read/Write

Comme indiqué auparavant, un réglage d'accouplement a été effectué en usine pour les têtes spécifiées et le PCB R/W préalablement à la livraison. Ainsi, les réglages suivants ne sont pas nécessaires dans les stations de maintenance de PCB la première fois.
(Effectuez à la même occasion, remplacement du lecteur, des têtes du PCB R/W et du chargeur de plateau.)

Ajustage en usine à l'aide des calibres dédiés

1. Ajustage de la prémagnétisation de la tête de lecture analogique (R109:Lch, R110:Rch)
2. Ajustage de la réalimentation de la prémagnétisation de la tête de lecture analogique (R101:Lch, R102:Rch)
3. Ajustage de la prémagnétisation sur la tête de lecture numérique (R117)
4. Ajustage du niveau de sortie de la tête de lecture numérique (R135)
5. Ajustage du courant d'enregistrement de la tête d'enregistrement de lecture numérique (R167)

   1. et 2. déterminent la valeur de distorsion dans la lecture analogique.

   2. détermine la réponse en fréquence de la même manière. En conséquence, si vous expérimentez avec les résisteurs d'ajustage pour 1. et 2., ces caractéristiques seront détériorées. Ces opérations peuvent être contrôlées aux bornes Ana L et R terminals sur le PCB R/W.

3. sera remplacé par un résisteur fixe dans un avenir proche. Etant donné que la sortie numérique n'adopte que deux valeurs 1 ou 0, une distorsion ondulaire mineure peut être acceptée.

4. est l'ajustage permettant à un atténuateur de développer une tension spécifiée pour envoyer un signal au circuit de traitement de signaux (PCB DCC). Ceci peut être utilisé pour vérifier qu'une tension de sortie correcte est obtenue sur la tête. Cette opération peut être contrôlée à partir de la borne RMUX sur le PCB R/W.

5. est nécessaire pour enregistrer des signaux sur une profondeur constante sur la bande.
Pour chaque tête, il y a un courant d'enregistrement recommandé. (140 ~ 180mA) Si la valeur n'est pas ajustée de manière correcte, la valeur RD MUX dans 4 ne sera pas la même pour une bande enregistrée par le client que pour une bande préenregistrée.
En outre, si un enregistrement est effectué sur une couche profonde à valeur élevée, les enregistrements antérieurs ne pourront pas être effacés lorsqu'un enregistrement est effectué sur cet endroit ultérieurement, et le taux d'erreur augmentera à cet endroit.

Points de contrôle pour le PCB Lecture/Ecriture (R/W)

Dans des conditions de fonctionnement normales, les signaux suivants peuvent être observés auprès des connecteurs PCB R/W.

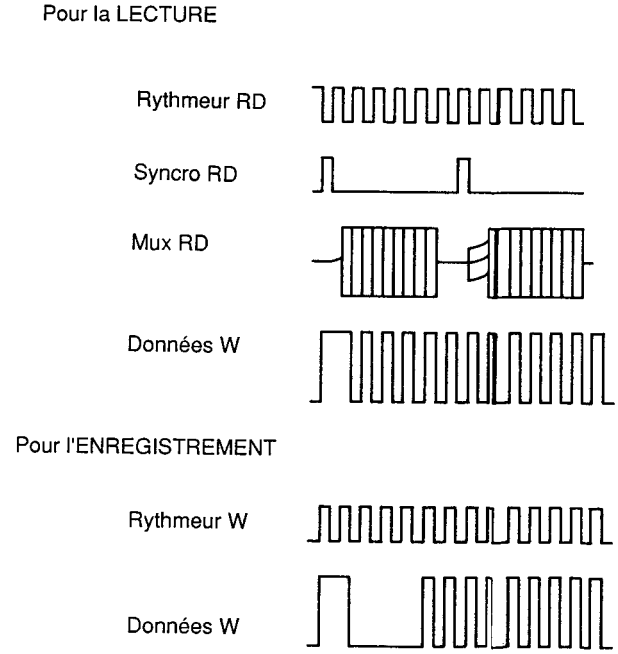

Fig. 3

Les formes d'onde actuelles sont indiquées sur la page suivante.

Pour la lecture (PLAYBACK) **Photo 1**

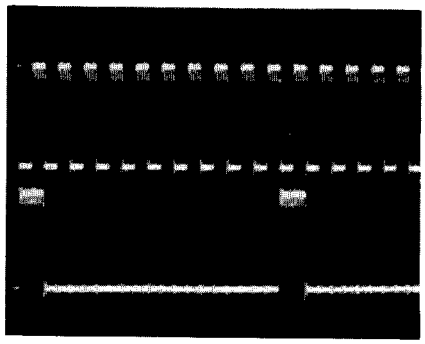

Haut : Rythmeur Rd
Bas : Syncro Rd
X : 0.5µS/div
Y : 0.2V/div

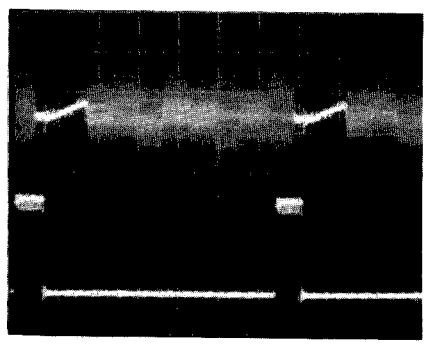

Haut : Rythmeur Rd
Bas : Syncro Rd
X : 0.5µS/div
Y : 50mV/div(Up)
Y : 0.2V/div(Dn)

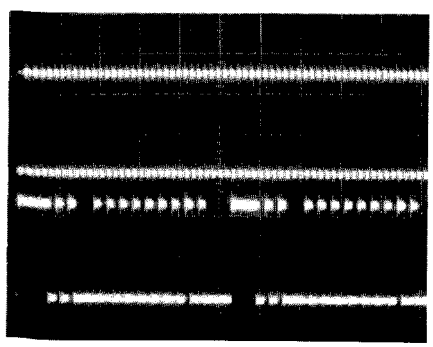

Haut : Rythmeur W
Bas : Données W
X : 2µS/div
Y : 0.2V/div

Pour l'enregistrement (RECORDING) **Photo 2**

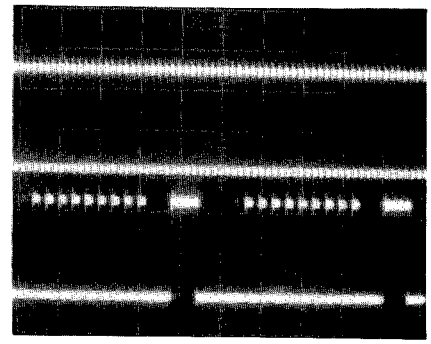

Haut : Rythmeur Wd
Bas : Données W
X : 2µS/div
Y : 0.2V/div

Servo cabestan DCC

Enregistrement:

La CI DDSP sur le PCB DCC émet continuellement une forme d'onde rectangulaire de 24kHz, 50%. Ceci peut être contrôlé à partir du point de contrôle #3 de J411 sur le PCB. A l'aide de cette forme d'onde rectangulaire, le moteur du cabestan tourne à la vitesse indiquée pour enregistrer les signaux sur une bande.

Lecture DCC:

Le signal numérique provenant de la tête est lu, et la déviation de la vitesse est calculée comme une variation de la charge à la borne de vitesse. Le circuit du servo sur le PCB du plateau, transforme la sortie en une force d'entraînement pour le moteur du cabestan, ce qui en assure la commande.
Etant donné que le moteur du cabestan est du type à commande électronique, il possède quatre bornes, +, –, A, and B.

Lecture analogique:

Développe continuellement un signal à forme d'onde rectangulaire fixe de 24kHz, 50% de charge, comme pour le mode d'enregistrement.

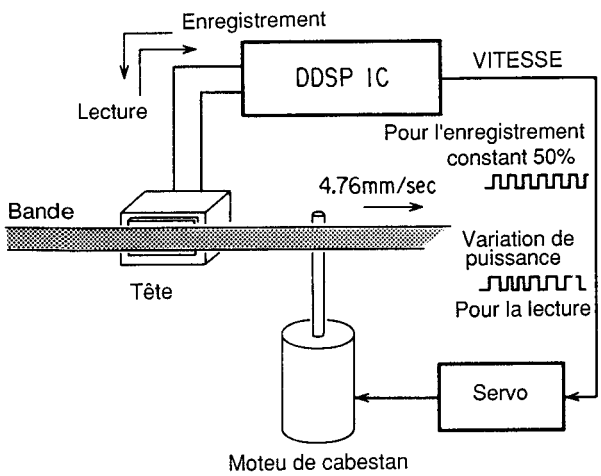

Système servo à cabestan DCC

Les formes d'onde actuelles sont indiquées sur la page suivante.

SIGNAL DE VITESSE **Photo 3**

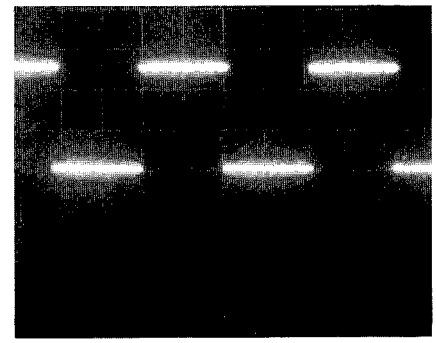

Pour l'enregistrement RECORDING
X : 10µS/div
Y : 0.2V/div

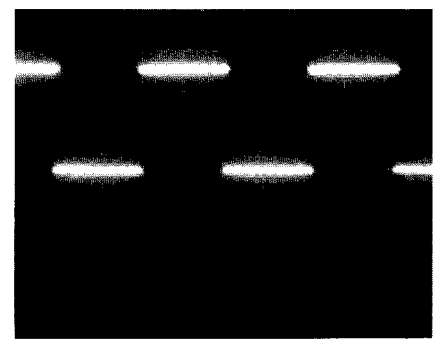

Pour la lecture normale PLAYBACK
X : 10µS/div
Y : 0.2V/div

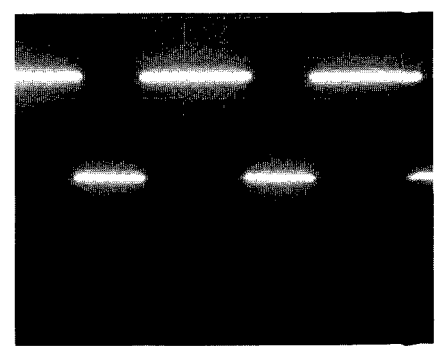

Pour la lecture PLAYBACK avec OFFSET
X : 10µS/div
Y : 0.2V/div

MESURES ET AJUSTAGES ELECTRIQUES

Ajustage de la vitesse de bande (PM03 PCB)

1. Raccordez un fréquence-mètre à l'une des sorties analogiques L ou R.
2. Lisez sur le côté A le signal 3.15kHz (3kHz) de la cassette d'essai du pleurage et du scintillement.
3. Ajustez la lecture des fréquences RS02 entre 3145Hz (2990Hz) et 3155Hz (3010Hz).
4. Lisez 3.15kHz (3kHz) sur le côté B.
5. Ajustez RS08 pour la lecture entre 3145Hz (2990Hz) et 3155Hz (3010Hz).

REMARQUE:

Si l'ajustage de l'appareil n'est pas effectué de manière précise et si l'erreur de rotation est supérieure à une certaine valeur, le servo n'est pas verrouillé pendant la lecture d'une bande DCC tape et les signaux seront mis en sourdine. Cette condition (verrouillée ou non) peut être contrôlée à la borne vitesse (#3) sur JW06. (Reportez-vous à la photo.) Dans des conditions de verrouillage normales, la déflexion du signal de vitesse est inférieure à 0.5mS.

Ajustage de détecteur rapide (PM03 PCB)

1. Raccordez le voltmètre CC entre 3-J031 et la masse.
2. Utilisez CC Maxwell UDI90.

   (Mauvaise bande pour ce qui est de la réflexion de la lumière)
3. Faites défiler la bande jusqu'à ce que la portion vierge est passée.
4. Appuyez sur PLAY.
5. Ajustez R036 pour la lecture CC de 1V.

   Si vous n'obtenez pas 1V à l'ajustage maximum, laissez le point maximum.

Ajustage de la réponse en fréquence pour la lecture analogique (PG03 PCB)

1. Lisez les signaux 40Hz, 1kHz, 14kHz sur la bande d'essai TCC 183C (–24dB).
2. Réglez chacun des résisteurs d'ajustage R645(L) et R646(R) de manière à ce que le niveau du signal 40Hz reste à l'intérieur de l'intervalle 0 ~ 1dB à partir du niveau de référence 1kHz.
3. Réglez chacun des résisteurs d'ajustage R643(L) et R644(R) de manière à repérer le signal de niveau 14kHz dans l'intervalle 0 ~ 1dB à partir du niveau de référence 1kHz.

Ajustage de la sortie de lecture (Dolby) (PG03 PCB)

1. Raccordez un voltmètre CA entre 1-J601 et 2-J601 pour le canal R et 3-J601 et 2-J601 pour le canal L.
2. Lisez la cassette d'essai Dolby.
3. Ajustez R633 (L) et R634 (R) pour la lecture CA de 389mV.

Ajustage de la sensibilité du compteur de niveau (PG03 PCB)

1. Raccordez un signal de sortie 1kHz (–12dB) numérique (44.1kHz) à la borne numérique.
2. Réglez l'appareil sur le mode REC PAUSE.
3. Réglez chacun des résisteurs d'ajustage RL05(L), et RL06(R) jusqu'à ce que le compteur illumine le point –10dB, puis éteint le point –12dB.
4. A la suite du réglage ci-dessus, lisez la bande d'essai Dolby, contrôlez que le compteur illumine le point 0dB.

REMARQUE:

Si le compteur s'illumine partout sauf sur le point 0dB, refaites le réglage en reprenant dès le début.

Ajustage de libre course VCO (PZ03 PCB)

1. Mettez l'interrupteur d'alimentation sur ON. (N'entrez aucun signal numérique.)
2. Vérifiez la fréquence au point d'essai J442, et réglez le résisteur d'ajustage R455 sur 7.5MHz ± 0.1MHz.

REMARQUE:

Si ce réglage n'est pas effectué de manière correcte, le signal sync n'est pas verrouillé sur un signal extérieur. Cette fréquence doit être contrôlée rigoureusement lors du remplacement des CI Q441, Q443 et Q444.

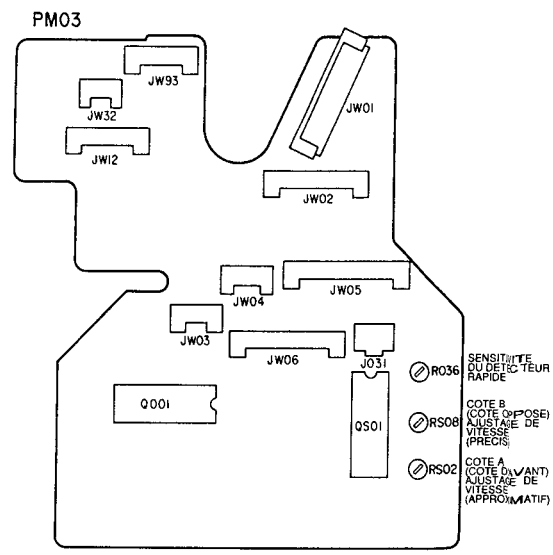

(D)

TONKÖPFE, DECK-MECHANISMUS UND DEREN SCHNITTSTELLEN

DCC-Kopf

Die für DCC verwendeten Köpfe werden Dünnschicht-Köpfe genannt. Sie werden hergestellt, indem man 20 Mal oder noch häufiger eine mehrfache Aufdampfung und Aufträge, wie bei der Herstellung von IC's, durchführt.

Dementsprechend haben die Köpfe gegenüber den in den konventionellen Analog-Cassettengeräten Spulen-Typ-Köpfen unterschiedliche Merkmale und Eigenschaften.

1. Wiedergabe-Köpfe verwenden ein magnetisches Widerstandselement (MR-Element).
2. Das MRE benötigt eine Vormagnetisierung, um seine maximale Leistung zu erreichen. Deshalb wird ein Vorspannungsleiter, der einer Spule entspricht, zur Erzeugung der Vormagnetisierung eingebaut.
3. Analoge Wiedergabeköpfe benötigen eine magnetische Rückmeldung zur Erhöhung der Linearität. Dieses wird dadurch erreicht, indem man ein magnetisches Feld proportional zu der Leistung des MRE durch eine Vormagnetisierung erzeugt.

Die Anschlußpunkte und die Struktur der DCC-Köpfe werden in Abbildung 1 gezeigt.

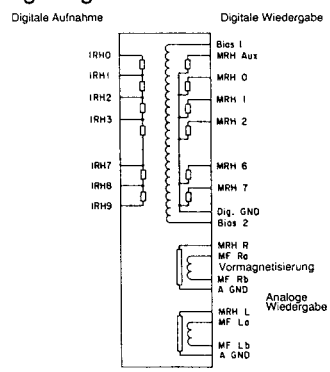

Abb. 1 Anschlußauflistung und Strukturen des DCC-Kopfes

Vorsicht beim Umgang mit Tonköpfen

Die Köpfe sind empfindlich gegen elektrostatische Entladungen (Etwa 150 V).
Die Köpfe sind gegen äußere elektrostatische Entladungen durch den Anschluß der flexiblen Kabel an die Lese/Schreib-Platine geschützt.
Werden diese Verbindungen gelöst, so ist das Cassettendeck grundsätzlich auf eine Unterlage zu legen, die entsprechend geerdet ist. Zusätzlich sollte ein Anti-Statik-Band getragen werden.
Außerdem sollten die gelösten Kabel mit Brücken verbunden werden.

Die Köpfe sind auch gegen starke, äußere Magnetfelder so empfindlich, daß der analoge Ausgang beeinflußt werden kann. Verwenden Sie keinen Tonkopf-Entmagnetisierer o.ä.

WARNUNG

VERWENDEN SIE KEINE ENTMAGNETISIERUNGSCASSETTE.

AUTOREVERSE CASSETTEN DECK

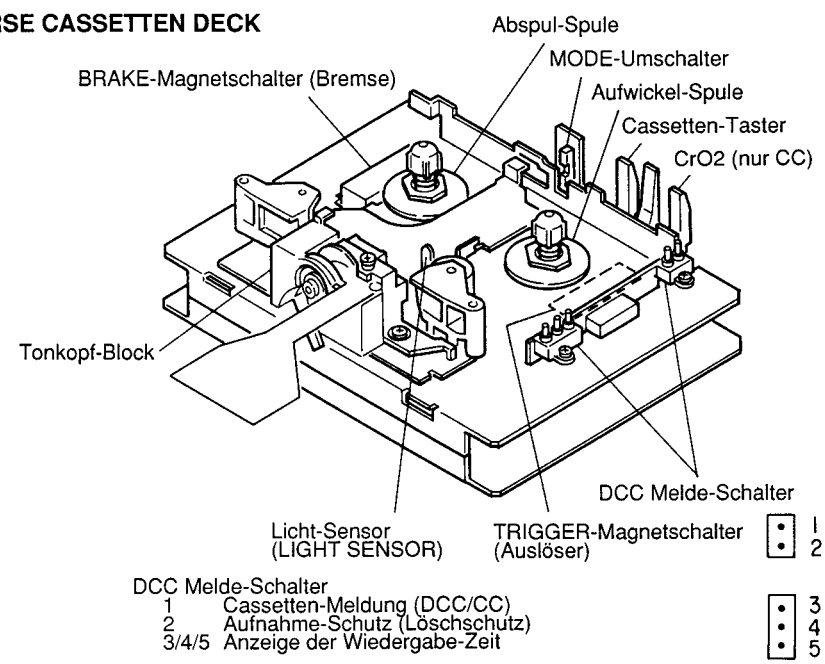

DCC Melde-Schalter
1 Cassetten-Meldung (DCC/CC)
2 Aufnahme-Schutz (Löschschutz)
3/4/5 Anzeige der Wiedergabe-Zeit

Anpassung an die Lese/Schreib-Platine

je Kopf erforderlich:

- Justierung der Stärke der Vormagnetisierung (jeweils für analog und digital)
- Einstellen der Rückmeldung (nur für die analoge Wiedergabe)

Das bedeutet, eine Anpassung hat zwischen den Köpfen und der an sie anzuschließenden L/S Platine zu erfolgen. Es müssen daher die sich auf der L/S-Platine befindlichen Trimmer nachgeregelt werden, wenn entweder ein Tonkopf oder die L/S-Platine ausgetauscht werden.

Für diese Justierung werden genaue Einstell-Instrumente benötigt.

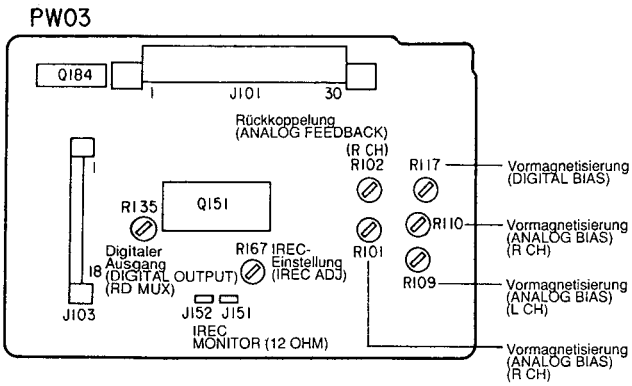

Abb. 2

Justierung der Lese/Schreib-Platine

Wie schon vorstehend gesagt, wurde vor dem Versand im Werk eine genaue Abstimmung zwischen den entsprechenden Köpfen und der L/S-Platine vorgenommen. Es ist daher nicht notwendig, im Service die Platine zuerst zu überprüfen.
(Ersetzen Sie das Deck, die Köpfe, die L/S-Platine und den Lademechanismus als eine Baugruppe.)

Justierung mit speziellen Einstell-Instrumenten im Werk

1. Justierung der Vormagnetisierung der analogen Wiedergabeköpfe (R 109:Linker Kanal, R 110:Rechter Kanal)
2. Justierung der Rückmeldung der analogen Wiedergabeköpfe (R 101:L, R 102:R)
3. Justierung der Vormagnetisierung der digitalen Wiedergabeköpfe (R 117)
4. Justierung der Ausgangsleistung der digitalen Wiedergabeköpfe (R 135)
5. Justierung des Stromes der digitalen Aufnahmeköpfe (R 167)

In 1. und 2. bestimmen Sie den Wert der Verzerrung bei analoger Wiedergabe.

In 2. bestimmen Sie den Frequenzgang in der gleichen Art. Eine Veränderung der Trimmer für 1. und 2. wird deshalb die Charakteristika verschlechtern. Dieses kann an den Analoganschlüssen L und R der L/S-Platine beobachtet werden.

In 3. wird in nächster Zeit durch einen Festwertwiderstand ersetzt. Da der digitale Ausgang nur zwei Zustände, 1 und 0. kennt, sind geringe Verzerrungen der Wellenform zulässig.

4. ist die Einstellung eines Dämpfungsgliedes zur Erzeugung einer bestimmten Spannung, um ein Signal an den Signal-Verarbeitungs-Schaltkreis zu schicken (DCC-Platine). Dieses kann zur Überprüfung der richtigen Ausgangsleistung des Tonkopfes benutzt werden. Dieses kann an dem RMUX-Terminal der L/S-Platine beobachtet werden.

5. wird benötigt, um das Signal in einer gleichbleibenden Tiefe des Bandes aufzuzeichnen. Es gibt für jeden Kopf einen individuellen, empfohlenen Aufnahmestrom. (140 ~ 180 mA).
Wird dieser Wert nicht genau eingestellt, so stimmt der RD MUX Wert in 4 bei einem selbstbespielten Band und einem bespielten Band nicht überein.
Wird eine Aufnahme mit einem hohen Wert im tiefen Bereich gemacht, so können die vorhergegangenen Aufnahmen nicht gelöscht werden, wenn zu einem späteren Zeitpunk an dieser Stelle eine Überspielung erfolgen soll. Die Fehlerrate wird sich in diesem Abschnitt erhöhen.

Testpunkte der L/S-Platine

Unter normalen Betriebszuständen können die folgenden Signale an den Anschlußpunkten der L/S-Platine abgenommen werden.

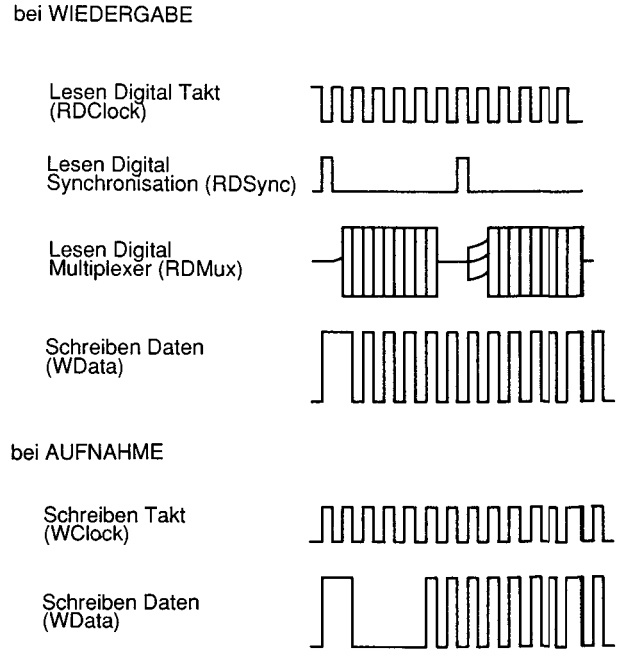

Abb. 3

Auf der nächsten Seite sind die aktuellen Wellenformen abgebildet.

Bei der Wiedergabe **Foto 1**

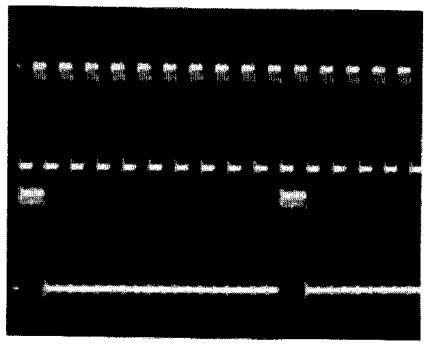

Auf : Lesen Takt (Rdclock)
Ab : Lesen Synchronisation (Rdsync)
X : 0.5µS/div
Y : 0.2V/div

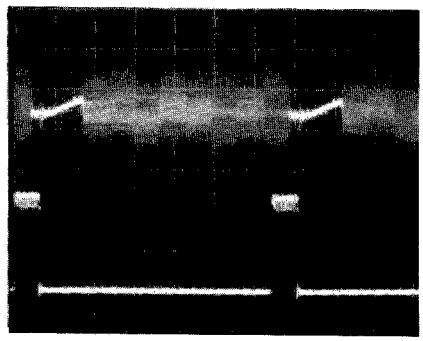

Auf : Lesen Takt (Rdclock)
Ab : Lesen Synchronisation (Rdsync)
X : 0.5µS/div
Y : 50mV/div(Up)
Y : 0.2V/div(Dn)

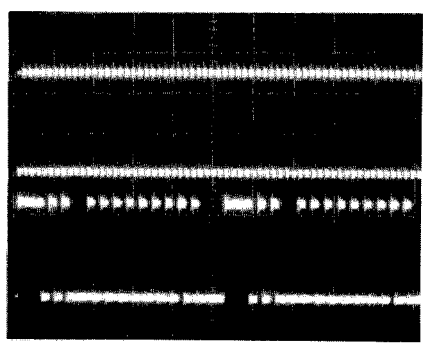

Auf : Schreiben Takt (Wclock)
Ab : Schreiben Daten (Wdata)
X : 2µS/div
Y : 0.2V/div

Bei der Aufnahme **Foto 2**

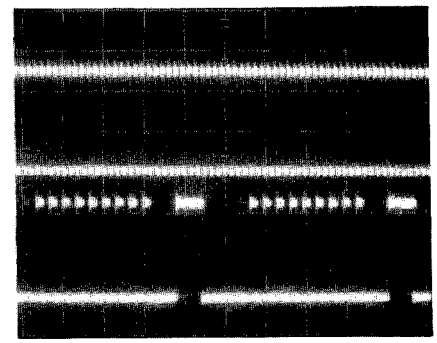

Auf : Schreiben Takt (Wdclock)
Ab : Schreiben Daten (Wdata)
X : 2µS/div
Y : 0.2V/div

DCC Capstan Servo

Aufnahme:

Das DDSP IC auf der DCC Platine erzeugt ständig eine Rechteckwelle von 24kHz bei 50% Last. Dieses kann an dem Testpunkt #3 von J 411 auf der Platine beobachtet werden. Mit dieser Rechteckwelle dreht sich der Capstanmotor mit einer festgelegten Geschwindigkeit bei Bandaufnahmen.

DCC Wiedergabe:

Das digitale Signal des Kopfes wird gelesen, die Geschwindigkeitsabweichung errechnet und die Leistung steht als Variation der Nennleistung am Geschwindigkeits-Ausgang an. Die Servoschaltung auf der Lade-Platine wandelt diese Leistung in eine Antriebskraft für den Capstan-Motor, wodurch die Regelung erfolgt.
Da der Capstan-Motor einen elektronischen Regler enthält, hat er vier Anschlüsse: +, –, A und B.

Analoge Wiedergabe:

Erzeugt ständig ein Signal mit einer bestimmten Rechteckwelle von 24kHz bei 50% Last wie im Aufnahmebetrieb.

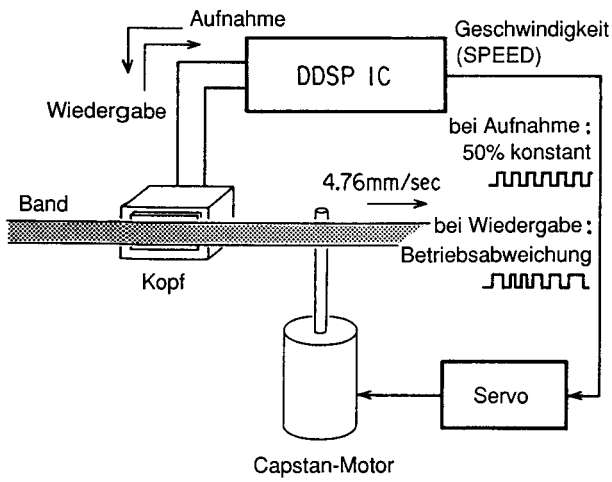

DCC Capstan Servo System

Auf der nächsten Seite sind die aktuellen Wellenformen abgebildet.

GESCHWINDIGKEITS-SIGNAL **Foto 3**

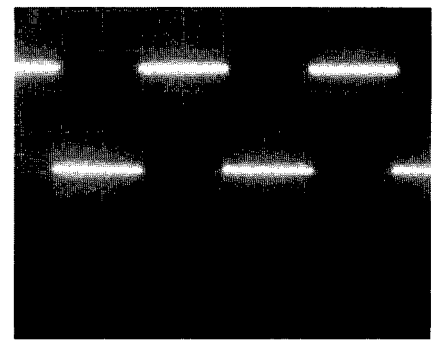

WÄHREND DER AUFNAHME
X : 10µS/div
Y : 0.2V/div

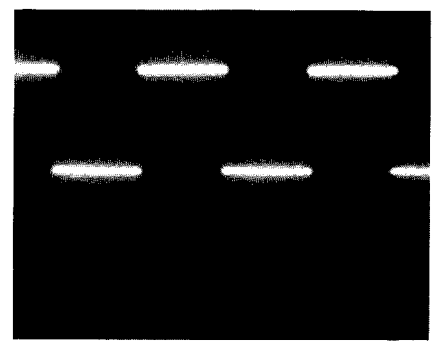

Bei normaler WIEDERGABE
X : 10µS/div
Y : 0.2V/div

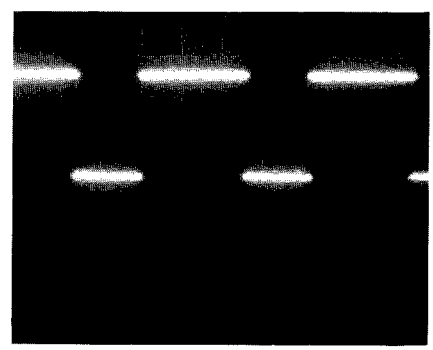

Bei WIEDERGABE mit OFFSET
X : 10µS/div
Y : 0.2V/div

ELEKTRISCHE MESSUNGEN UND EINSTELLUNGEN

Justierung der Bandgeschwindigkeit (PM03 PCB)

1. Verbinden Sie einen Frequenzzähler mit dem analogen Ausgang des linken oder rechten Kanals.
2. Spielen Sie das 3.15kHz (3kHz) Signal auf Seite A der Gleichlauf-Testcassette. (Wow & Flutter)
3. Justieren Sie RS 02 so, daß die angezeigte Frequenz zwischen 3145Hz (2990Hz) und 3155Hz (3010Hz) liegt.
4. Spielen Sie den 3.15kHz (3kHz) Ton der Seite B.
5. Justieren Sie RS 08 so, daß die Anzeige zwischen 3145Hz (2990Hz) und 3155Hz (3010Hz) liegt.

HINWEIS:

Wird die Justierung der Baugruppe nicht ausreichend genau durchgeführt, so daß der Rotationsfehler höher als der spezifizierte Wert ist, wird das Servo bei der Wiedergabe eines DCC-Bandes nicht verriegelt und die Signale dadurch stumm geschaltet. Dieser Zustand (verriegelt oder nicht verriegelt) kann an dem Testpunkt der Geschwindigkeit #3# von JW 06 überwacht werden (Siehe Foto). Bei normal verriegeltem Zustand beträgt die Abweichung des Geschwindigkeitssignals weniger als 0,5 mS.

Justierung des Quick-Sensors (PM03 PCB)

1. Schalten Sie ein Gleichstrom-Voltmeter zwischen 3-J031 und Masse.
2. Verwenden Sie CC Maxwell UDI 90.

(Ein schlechtes Band in Hinblick auf Licht-Reflexion)

3. Spulen Sie das Band soweit, bis der Vorspann beendet ist.
4. Drücken Sie die PLAY-Taste.
5. Verstellen Sie R036 so, daß 1 V Gleichstrom angezeigt wird. Sollte es nicht möglich sein, in Maximalstellung 1 V zu erreichen, so stellen Sie den höchsten erreichbaren Wert ein.

Justierung des Frequenzganges bei analoger Wiedergabe (PG03 PCB)

1. Spielen Sie die Töne 40Hz, 1kHz und 14kHz des Testbandes TCC 183C (–24dB).
2. Justieren Sie die Trimmer R645 (L) und R646 (R) so, daß der 40Hz Ton innerhalb des Bereiches von 0 bis 1dB von dem 1kHz Referenzton liegt.
3. Justieren Sie die Trimmer R643 (L) und R644 (R) so, daß der 14Hz Ton innerhalb des Bereiches von 0 bis 1dB von dem 1kHz Referenzton liegt.

Justierung der Ausgangsspannung bei der Wiedergabe (Dolby) (PG03 PCB)

1. Schalten Sie ein Wechselspannungs-Voltmeter zwischen 1-J601 und 2-J601 für den rechten Kanal und zwischen 3-J601 und 2-J601 für den linken Kanal.
2. Spielen Sie die Dolby-Testcassette.
3. Justieren Sie R633 (L) und R634 (R) so, daß eine Wechselspannung von 389mV angezeigt wird.

Justierung der Empfindlichkeit der Aussteuerungsanzeige (PG03 PCB)

1. Legen Sie ein digitales 1kHz (–12dB) Signal (44.1kHz) an den digitalen Anschluß.
2. Schalten Sie das Gerät auf REC PAUSE.
3. Justieren Sie die Trimmer RL05 (L) und RL06 (R) so, daß die Anzeige an der –10dB Marke aufleuchtet und bei der –12dB Marke wieder erlischt.
4. Spielen Sie nach obiger Justierung das Dolby-Testband ab und überprüfen Sie, daß die Anzeige an der 0dB Marke aufleuchtet.

HINWEIS:

Falls die Aussteuerungsanzeige außer an der 0dB Marke aufleuchtet, so ist die Justierung von dem ersten Schritt an zu wiederholen.

Justierung der nichtstabilen Frequenz mit VCO (spannungsgesteuerter Oszillator) (PZ03 PCB)

1. Schalten Sie den Netzschalter auf ON (EIN). (Speisen Sie kein digitales Signal ein.)
2. Messen Sie die Frequenz an dem Testpunkt J442 und justieren Sie mit dem Trimmer R455 7.5MHz ± 0.1MHz ein.

HINWEIS:

Falls diese Justierung nicht richtig durchgeführt wurde, so wird das Synchronisations-Signal nicht mit dem externen Signal gekoppelt.
Nach einem Auswechseln der IC's Q441, Q443 und Q444 muß diese Frequenz sorgfältig überprüft werden.

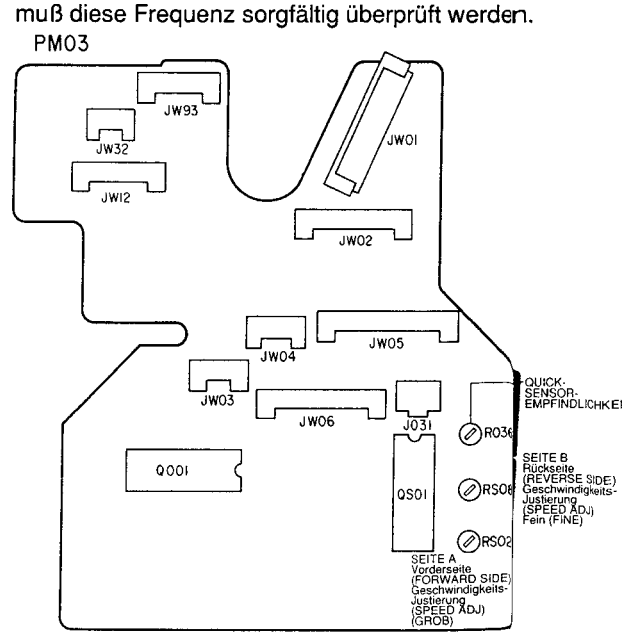

(I)

TESTINE, MECCANISMO DELLA PIASTRA E INTERFACCIA

Testina DCC

Le testine usate nel DCC vengono chiamate testine dalla pellicola sottile e sono fatte ripetendo 20 o più volte le evaporazioni multipli durante la fabbricazione dei componenti IC.

Di conseguenza, le testine hanno delle caratteristiche differenti dalle testine del tipo con la bobina di avvolgimento usate nelle piastre a cassette analogiche convenzionali.

1. La testina di riproduzione è stata dotata di una resistenza (elemento MR).
2. L'MRE richiede un bias magnetico per ottenere l'uscita massima e per questo motivo un conduttore bias che equivale una bobina è stato installato per sviluppare un bias magnetico.
3. Inoltre, la testina di riproduzione analogica richiede una retroazione magnetica per aumentare la linearità. Questo viene realizzato creando un campo magnetico proporzionale all'uscita MRE prodotta dal conduttore bias.

Terminali e la struttura della testina DCC sono visualizzati nella Fig. 1.

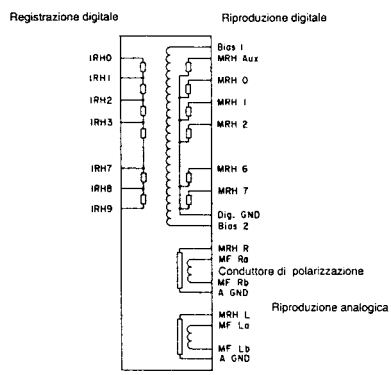

Fig. 1 ELENCO DEI TERMINALI E DELLA STRUTTURA DELLA TESTINA DCC

Precauzioni riguardanti le testine

Le testine sono sensibili al voltaggio elettrostatico (circa CC 150 V).
Le testine saranno protette contro i campi elettrostatici esterni se si collegano dei cavi all'R/W PCB.
Per scollegare i cavi, collocate la piastra a cassette su un banco dopo aver preso tutte le precauzioni per scaricare l'effetto elettrostatico ed indossate una fascia di neutralizzazione dell'effetto elettrostatico.
Inoltre, installate sempre un perno di messa a corto circuito dove avete rimosso i cavi.

Le testine sono anche sensibili a forti campi magnetici esterni, i quali possono influire sull'uscita analogica. Non usate uno smagnetizzatore per testine, ecc.

AVVISO

NON USATE UNA CASSETTA DI SMAGNETIZZAZIONE.

PIASTRA A CASSETTE CON INVERSIONE AUTOMATICA

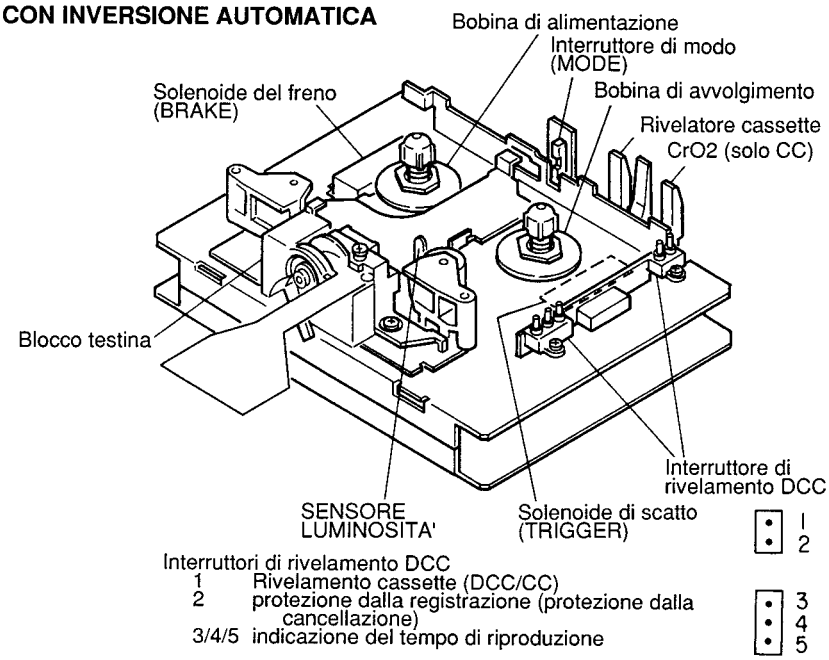

Accoppiamento con un PCB di lettura/scrittura

Per ciascuna testina è richiesto quanto segue:

- impostazione del bias (sia analogico e digitale)
- regolazione della retroazione (solo per la riproduzione analogica).

Cioè, l'accoppiamento è richiesto per le testine e per il PCB R/W al quale le testine sono collegate. Perciò, quando sostituite il PCB R/W oppure le testine, sarà necessario rifare la regolazione delle resistenze del R/W PCB.

La regolazione richiede degli attrezzi particolari di regolazione.

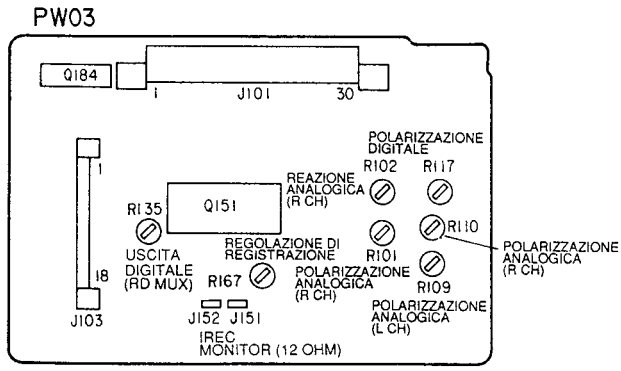

Fig. 2

Regolazione PCB di lettura/scrittura

Come abbiamo già spiegato, una regolazione di accoppiamento è stata fatta per le testine specificate e per il PCB R/W in fabbrica, per cui non sarà necessario effettuare delle regolazioni alle stazioni di servizio la prima volta. (Effettuate la sostituite della piastra, delle testine, del PCB R/W e del caricatore con un'unità.)

Regolazione effettuata in fabbrica

1. Regolazione del bias della testina di riproduzione analogica (R109:Lch, R110:Rch)
2. Regolazione della retroazione della testina di riproduzione analogica (R101:Lch, R102:Rch)
3. Regolazione del bias della testina di riproduzione digitale (R117)
4. Regolazione del livello di uscita di riproduzione della testina di riproduzione digitale (R135)
5. Regolazione della corrente di registrazione della testina di registrazione digitale (R167)

1. e 2. determinano il valore di distorsione durante la riproduzione analogica.

2. determina la risposta di frequenzxa nella stessa maniera. Di consequenza, la modificazione delle resistenze per 1. e 2. deteriorà quelle caratteristiche. Queste operazioni possono essere controllate a monitoraggio nei terminali L e R del PCB R/W.

3. sarà sostituita da una resistenza fissa entro poco. Poichè l'uscita digitale ha soltanto due valori, 1 o 0, una lieve distorsione nelle onde è ammissibile.

4. è la regolazione dell'attenuatore affinchè esso sviluppi il voltaggio specificato per trasmettere il segnale al circuito di elaborazione dei segnali (DCC PCB). Questo può essere usato per verificare che si ottiene l'uscita giusta dall'unità principale.
Questa operazione può essere controllata a monitoraggio al terminale RMUX dell'R/W PCB.

5. è richiesto per registrare i segnali ad una profondità costante nel nastro.
C'è un valore di corrente di registrazione raccomandato per ciascuna testina individualmente (140 ~ 180mA). Nel caso in cui questo valore non fosse regolato correttamente, il valore RD MUX del punto 4 non corrisponderà il nastro registrato dall'utente e il nastro inciso dalla casa discografica.
Inoltre, se si effettua una registrazione ad uno strato profondo con un valore molto alto, le registrazioni precedenti non potranno essere cancellate in caso desiderate coprire una vecchia registrazione con una nuova e la possibilità di errori aumenterà in quel punto sul nastro.

Punti di controllo dell'R/W PCB

Nelle condizioni operative normali, i seguenti segnali possono essere osservati quando provvengono dai connettori R/W PCB.

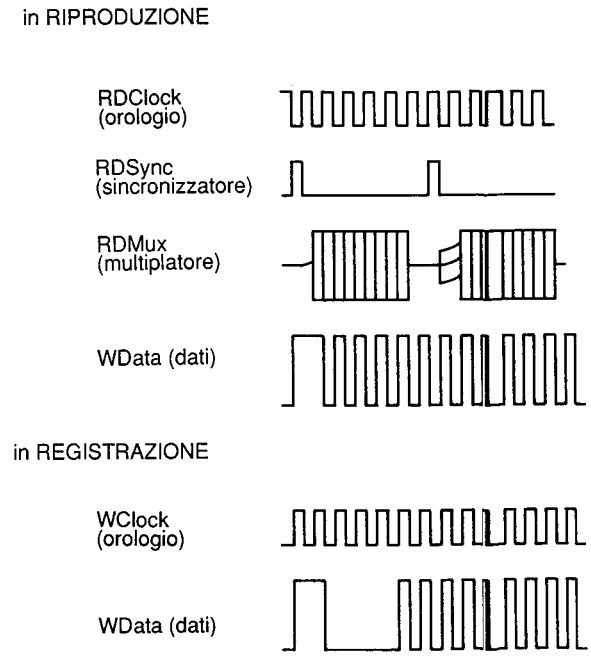

Fig. 3

Le onde sono visualizzate alla pagina che segue.

RIPRODUZIONE **Fotografia 1**

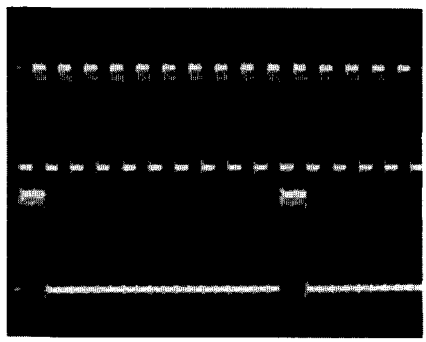

Sù: Rdclock
Giù: Rdsincronizzazione
X : 0.5µS/div
Y : 0.2V/div

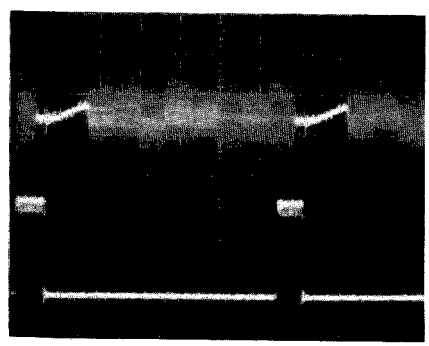

Sù: Rdorologio
Giù: Rdsincronizzazione
X : 0.5µS/div
Y : 50mV/div(Up)
Y : 0.2V/div(Dn)

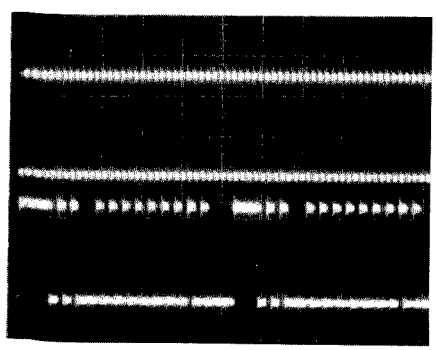

Sù: Wclock
Giù: Wdata
X : 2µS/div
Y : 0.2V/div

REGISTRAZIONE **Fotografia 2**

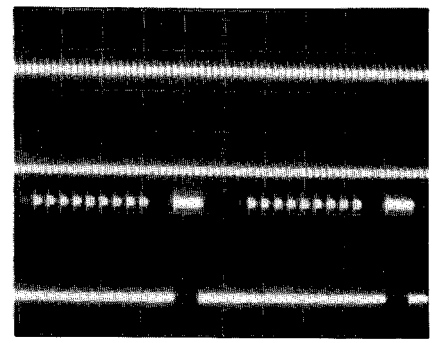

Sù: Wdorologio
Giù: Wdata
X : 2µS/div
Y : 0.2V/div

Capstan servo DCC

Registrazione:

Il DDSP IC del DCC PCB produce continuamente delle onde rettangolari di 24kHz, con una potenza di 50%. Questo fenomeno può essere controllato a monitoraggio al punto di controllo del PCB, #3 di J411. Con queste onde rettangolari, il capstan ruota alla velocità specificata per registrare i segnali sul nastro.

Riproduzione DCC:

Il segnale digitale proveniente dall'unità principale viene letto e la deviazione della velocità viene calcolato e riprodotto come variazione al terminale della velocità. Il circuito servo della sezione PCB trasforma l'uscita in una forza d'azionamento del motore del capstan, effettuando così il controllo.
Poichè il motore del capstan è del tipo elettronico, è stato dotato di quattro terminali: +, –, A e B.

Riproduzione analogica:

Sviluppa continuamente un segnale ad onde rettangolari e fisse a 24kHz, 50% di potenza come nel modo di registrazione.

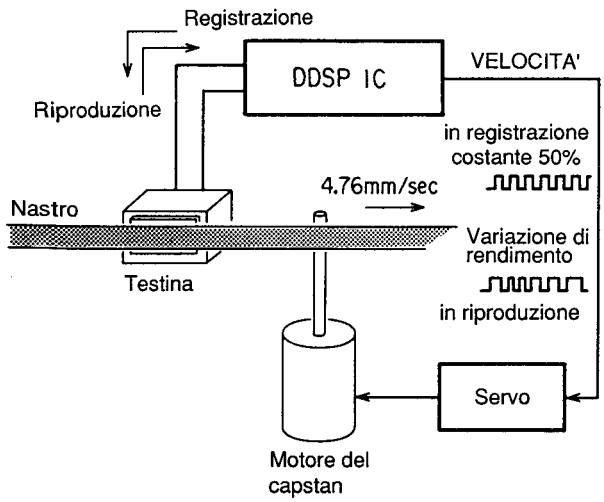

Sistema servo capstan DCC

Le onde sono visualizzate alla pagina che segue.

SEGNALE DI VELOCITA'

Fotografia 3

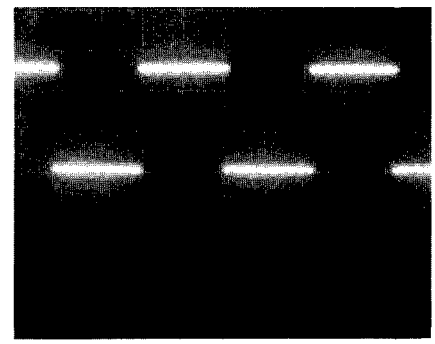

Durante la REGISTRAZIONE
X : 10µS/div
Y : 0.2V/div

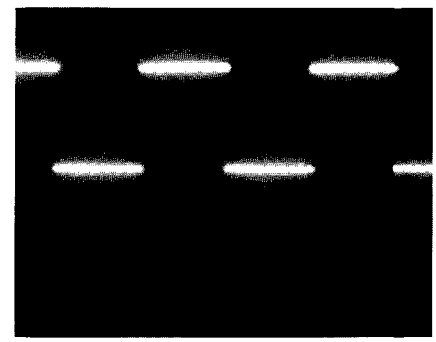

Durante la RIPRODUZIONE normale
X : 10µS/div
Y : 0.2V/div

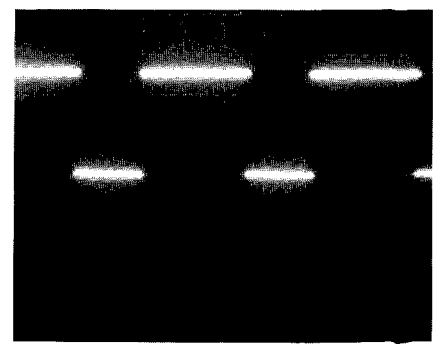

Durante la RIPRODUZIONE con OFFSET
X : 10µS/div
Y : 0.2V/div

MISURAZIONI E REGOLAZIONI ELETTRICHE

Regolazione della velocità del nastro (PM03 PCB)

1. Collegate il contatore della frequenza all'uscita analogica di sinistra (S) e di destra (R).
2. Riproducete un segnale 3.15kHz (3kHz) sul lato A della cassetta di prova del wow e flutter.
3. Regolate l'RS02 per la lettura della frequenza tra 3145Hz (2990Hz) e 3155Hz (3010 Hz).
4. Riproducete un segnale 3.15kHz (3kHz) sul lato B.
5. Regolate l'RS08 per una lettura tra 3145Hz (2990Hz) e 3155Hz (3010Hz).

NOTA:

Nel caso in cui la regolazione dell'unità non fosse esatta e l'errore di rotazione fosse superiore al valore specificato, il servo non sarà bloccato durante la riproduzione del nastro DCC e i segnali saranno silenziati. Questa condizione (bloccata o no) può essere controllato a monitoraggio al terminale della velocità (#3) del JW06. (Fate riferimento alla fotografia.) Nelle condizioni di bloccaggio normale, la deflezione del segnale di velocità sarà inferiore a 0.5 mS.

Regolazione del sensore veloce (PM03 PCB)

1. Collegate un voltimetro CC tra il 3-J031 e la massa.
2. Usate una cassetta CC Maxwell UDI90.
   (Per controllare i riflessi della luce)
3. Avvolgete il nastro finchè non sarà stato avvolto il capoguida.
4. Premete il tasto di riproduzione (PLAY).
5. Regolate l'R036 per una lettura CC di 1 V.
   Nel caso in cui non si riuscisse ad ottenere la regolazione massima ad 1 V, lasciate il punto massimo.

Regolazione della risposta di frequenza della riproduzione analogica (PG03 PCB)

1. Riproducete dei segnali 40Hz, 1kHz, 14kHz usando il nastro di prova TCC 183C (–24dB).
2. Regolate ciascuna resistenza di regolazione R645(L) e R646(R) in modo tale che il livello del segnale a 40Hz rimanga entro la gamma 0 ~ 1dB dal livello di riferimento 1kHz.
3. Regolate le resistenze di regolazione R643(L) e R644(R) in modo tale che il livello del segnale a 14kHz rimanga entro la gamma 0 ~ 1 dB dal livello di riferimento 1kHz.

Regolazione dell'uscita di riproduzione (Dolby) (PG03 PCB)

1. Collegate un voltimetro CA tra 1-J601 e 2-J601 per il canale destro (R) e tra 3-J601 e 2-J601 per il canale sinistro (L).
2. Riproducete una cassetta di prova Dolby.
3. Regolate R633 (L) e R634 (R) per una lettura CA di 389mV.

Regolazione della sensibilità del misuratore del livello (PG03 PCB)

1. Collegate un segnale digitale di 1kHz (–12dB) (44.1kHz) al terminale digitale.
2. Impostate il modo di pausa della registrazione (REC PAUSE) nell'unità.
3. Regolate le resistenze di regolazione RL05(L) e RL06(R) finchè non si illumineranno prima il punto –10dB, poi il punto –12dB sul misuratore del livello.
4. Dopo la regolazione suddetta, riproducete la cassetta di prova Dolby e verificate che il misuratore si illumini nel punto di 0dB.

NOTA:

Nel caso in cui il misuratore del livello si illuminasse in tutti i punti tranne quello di 0dB, ripetete la procedura di regolazione dall'inizio.

Regolazione della frequenza VCO (PZ03 PCB)

1. Collocate l'interruttore di accensione nella posizione ON. (Non applicate nessun segnale digitale.)
2. Assicuratevi che la frequenza sia quella del punto di prova J442 e regolate la resistenza di regolazione R455 al valore 7.5MHz ± 0.1MHz.

NOTA:

Nel caso in cui questa regolazione non viene effettuata correttamente, il segnale di sincronizzazione non corrisponderà a quello esterno.
Questa frequenza deve essere attentamente controllata quando sostituite l'IC Q441, Q443 e Q444.

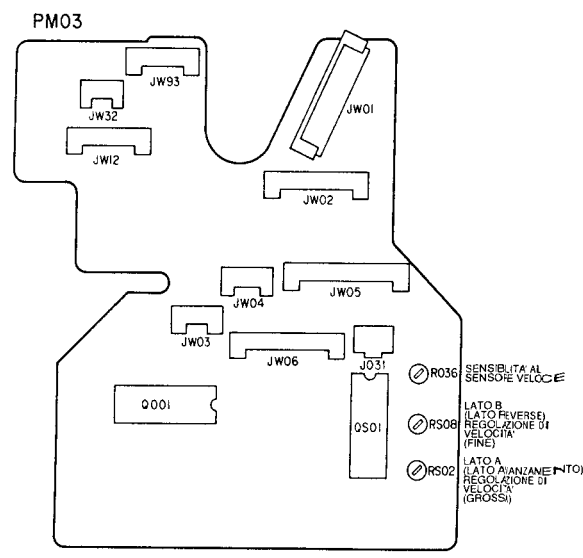

SET EXPLODED VIEW AND PARTS LIST

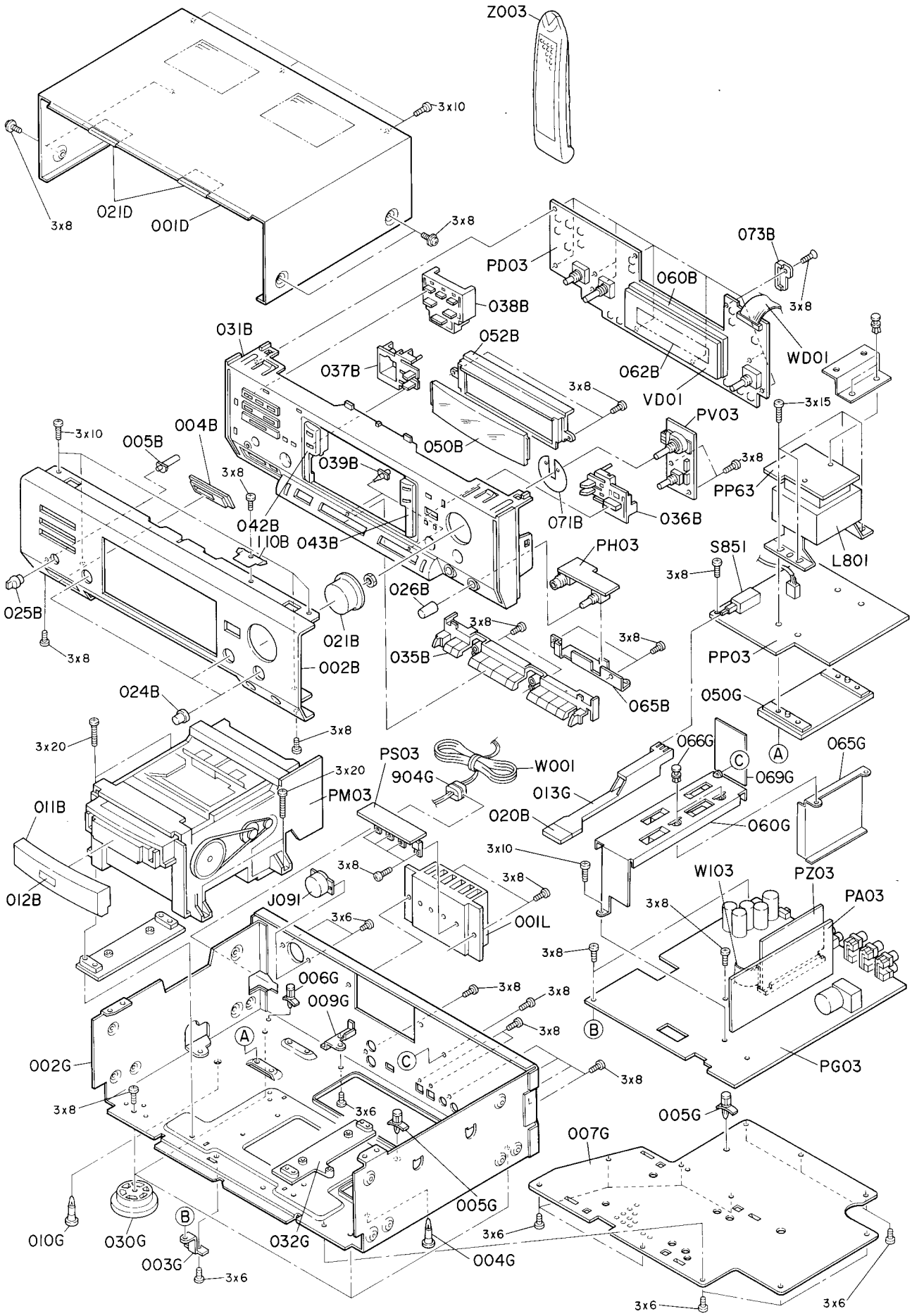

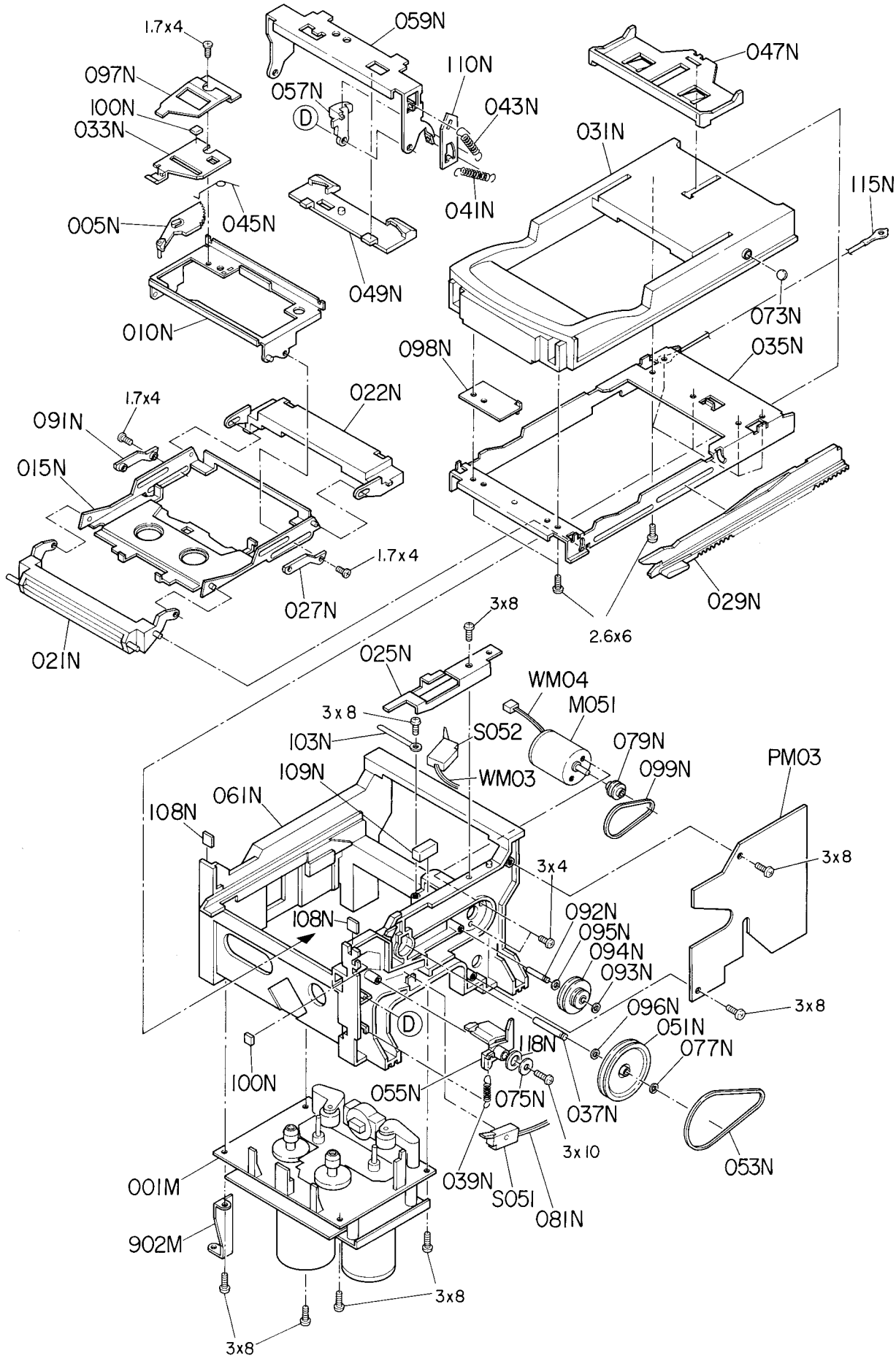
1.7x4
059N
097N
057N
110N
047N
100N
043N
033N
031N
115N
005N
045N
041N
049N
010N
073N
098N
035N
022N
091N
1.7x4
015N
1.7x4
027N
029N
021N
2.6x6
3x8
025N
WM04
3x8
M051
103N
S052
079N
PM03
109N
WM03
099N
061N
108N
3x4
3x8
092N
108N
095N
094N
093N
096N
3x8
051N
118N
077N
100N
055N
075N
037N
3x10
053N
001M
039N
S051
081N
902M
3x8
3x8

CABINET PARTS

002B	4822 443 41201	FRONT PANEL
004B	4822 381 11374	IR LENS
005B	4822 381 11375	POWER INDICATE LENS
011B	4822 454 21075	ESCUTCHEON
012B	4822 459 11111	BADGE DCC
020B	4822 410 62356	POWER BUTTON
021B	4822 413 41755	REC LEVEL KNOB (KIT)
024B	4822 413 31718	INPUT/BALANCE/DOLBY KNOB
025B	4822 411 20336	TIMER KNOB
026B	4822 413 31719	PHONES LEVEL KNOB
031B	4822 464 50939	FRONT MOLD CHASSIS
035B	4822 410 62361	MECHA BUTTON
036B	4822 410 62359	EJECT TEXT BUTTON
037B	4822 410 62357	COUNTER BUTTON
038B	4822 410 62358	STAT ID BUTTON
039B	4822 381 11373	PLAY/REC INDICATE LENS
042B	4822 454 21076	FRONT ESCUTCHEON (L)
043B	4822 454 21077	FRONT ESCUTCHEON (R)
050B	4822 450 61993	FL WINDOW
052B	4822 403 70779	FL WINDOW BRACKET
060B	4822 256 92006	FL HOLDER
062B	4822 454 12431	FL ADHESIVE FOR FL HOLDER
013G	4822 403 70778	POWER SW LINK
030G	4822 462 41977	SILVER LEG
904G	4822 532 60948	AC CORD BUSH
J091 ⚠	4822 272 10327	VOLTAGE SELECT [/01]

PACKING

001T	4822 736 21588	USER MANUAL [/00/01/05/10]
001T	4822 736 21592	USER MANUAL [BK01]
Z001	4822 321 21438	CONNECTIVE CORD RCA PIN
Z003	4822 218 30665	REMOTE COMMNDER DCC
Z005	4822 267 31133	AC ADAPTER [/01]

MECHANICAL PARTS

001N	4822 443 63788	TRAY MECHANISM ASSY
005N	4822 403 70784	ARM KIT
006N	4822 403 70783	ARM
007N	4822 535 93358	SHAFT
021N	4822 403 70781	ARM
022N	4822 403 70782	ARM
027N	4822 401 11486	COLLAR
029N	4822 522 33306	GEAR
031N	4822 443 63789	CASE
033N	4822 403 70785	RETAINER
039N	4822 492 33359	SPRING
041N	4822 492 33361	SPRING
043N	4822 492 33362	SPRING
045N	4822 492 33363	SPRING
047N	4822 443 63791	CONTROL BOARD MOVEMENT
049N	4822 403 70787	PAD
051N	4822 528 40349	PULLEY
053N	4822 358 31232	BELT
055N	4822 403 70788	LEVER
057N	4822 403 70789	LEVER
061N	4822 464 50941	FRAME
073N	4822 520 40293	BALL
075N	4822 532 21196	FLAT WASHER, L.
077N	4822 462 71886	STOPPER
079N	4822 528 40352	PULLEY
087N	4822 502 12245	P.H.M. SCREW
089N	4822 502 12245	P.H.M. SCREW
091N	4822 401 11485	CLAMPER
093N	4822 462 71886	WASHER
094N	4822 528 40351	PULLEY
095N	4822 532 11285	WASHER
096N	4822 532 11392	WASHER
M051	4822 361 60467	D.C.MOTOR 8V TRAY.
S051	4822 277 21132	SLIDE SWITCH CLOSE
S052	4822 277 21132	SLIDE SWITCH OPEN

DECK EXPLODED VIEW AND PARTS LIST

001M	4822 691 20777	MECHANISM ASSY
002M	4822 464 50942	MECHANISM BASE
003M	4822 403 70794	BRAKE LEVER
004M	4822 403 70786	THRUST RETAINER
005M	4822 522 33307	MAIN GEAR
010M	4822 502 21266	SCREW HEAD ASSY
013M	4822 492 33364	SPRING
020M	4822 528 10865	REEL
031M	4822 492 52341	SPRING
033M	4822 492 33365	SPRING
040M	4822 492 33366	SPRING
060M	4822 528 81484	PINCHROLLEA ASSY (R)
061M	4822 492 71233	FOR PINCHROLLEA (R) SPRING
070M	4822 502 21267	SCREW FOR SENSOR RETAINOR
071M	4822 502 21268	SCREW FOR END SENSOR
080M	4822 492 33367	SPRING
090M	4822 582 81485	PINCHROLLEA ASSY (F)
091M	4822 492 71234	SPRING FOR PINCHROLLEA (F)
100M	4822 502 21269	SCREW FOR DCC SENSOR SW
110M	4822 502 21271	SCREW FOR MOTOR BASE
111M	4822 502 21272	SCREW FOR MOTOR BASE
114M	4822 502 21273	SCREW FOR REEL MOTOR
115M	4822 532 12206	WASHER FOR (111M)
120M	4822 462 71885	BUFFER FOR DC MOTOR
121M	4822 502 21274	SCREW FOR DC MOTOR
130M	4822 502 21275	SCREW FOR SWITCH PCB
140M	4822 522 33308	GEAR
141M	4822 522 33309	GEAR
143M	4822 502 21265	SCREW FOR BRAKE SOLENOID
150M	4822 358 31234	BELT
151M	4822 528 60402	FLY WHEEL (F)
152M	4822 528 60403	FLY WHEEL (R)
160M	4822 492 71235	SPRING
180M	4822 522 33311	GEAR
181M	4822 492 33368	SPRING
182M	4822 492 33369	SPRING (C)
190M	4822 403 70791	LEVER
200M	4822 403 70792	LEVER
H071	4822 403 70793	HEAD ASSY
H702	4822 249 10474	HEAD REC/PLAY
S071	4822 271 30789	SWITCH MODE
S072	4822 271 30791	SWITCH TAPE IN
S073	4822 271 30791	SWITCH CrO2
S091	4822 276 13345	SWITCH LENGTH
S092	4822 276 13344	SWITCH DCC
L071	4822 281 50177	SOLENOID COIL TRIGER
L072	4822 281 50176	SOLENOID COIL BRAKE
M071	4822 361 21589	D.C.MOTOR 12V MAIN (CAPSTAN)
M072	4822 361 21588	D.C.MOTOR 8V REEL (FWD/REV)
Q071	4822 130 83233	PHOTO UNIT TAKE-UP GP2S06BC
Q072	4822 130 83233	PHOTO UNIT SUPPLY GP2S06BC
Q073	4822 130 83232	PHOTO UNIT QUICK SENSOR SPI-306-03

S

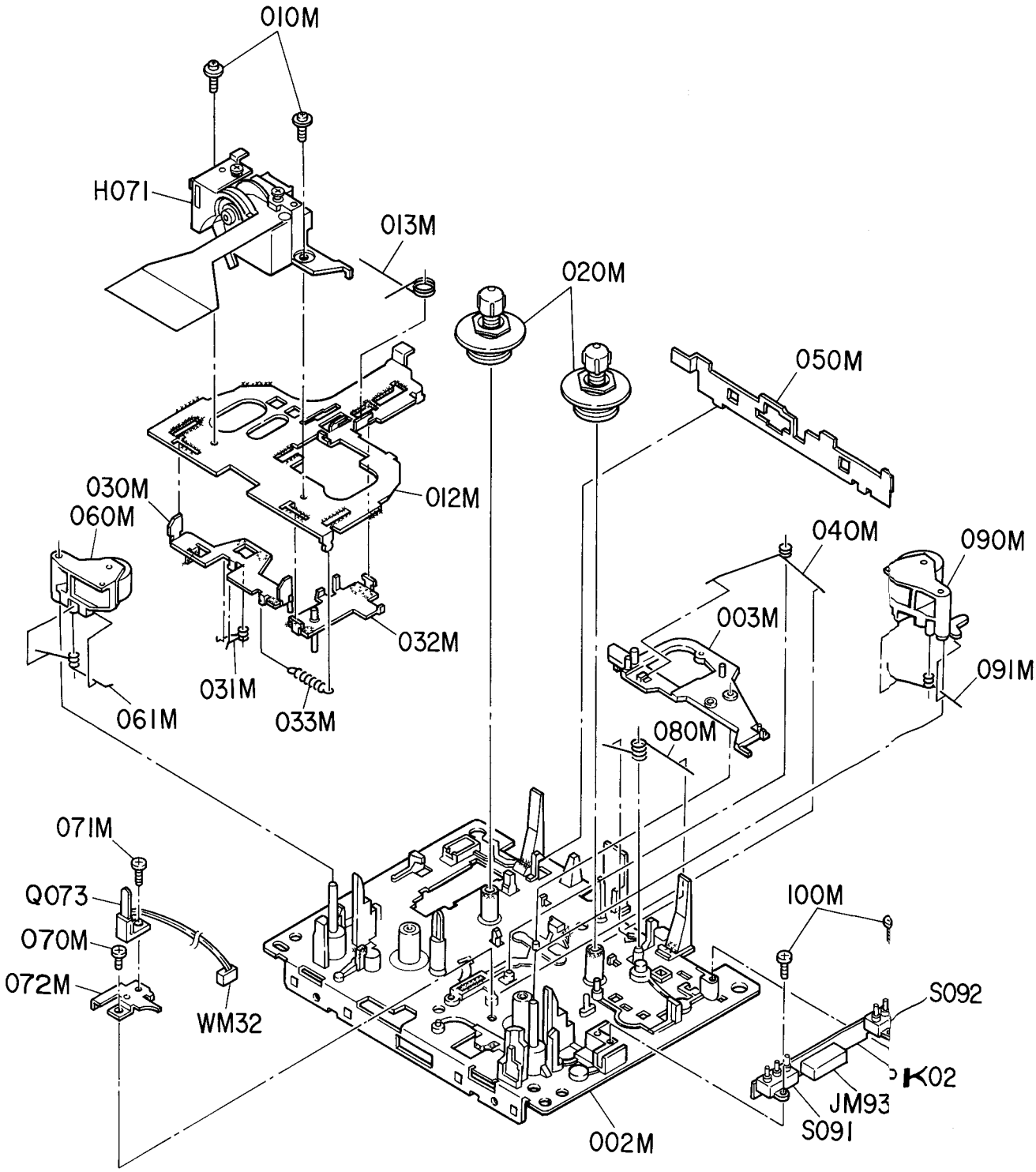
010M
H071
013M
020M
050M
012M
030M
060M
040M
090M
003M
032M
091M
031M
033M
061M
080M
071M
Q073
070M
072M
WM32
100M
S092
K02
JM93
S091
002M

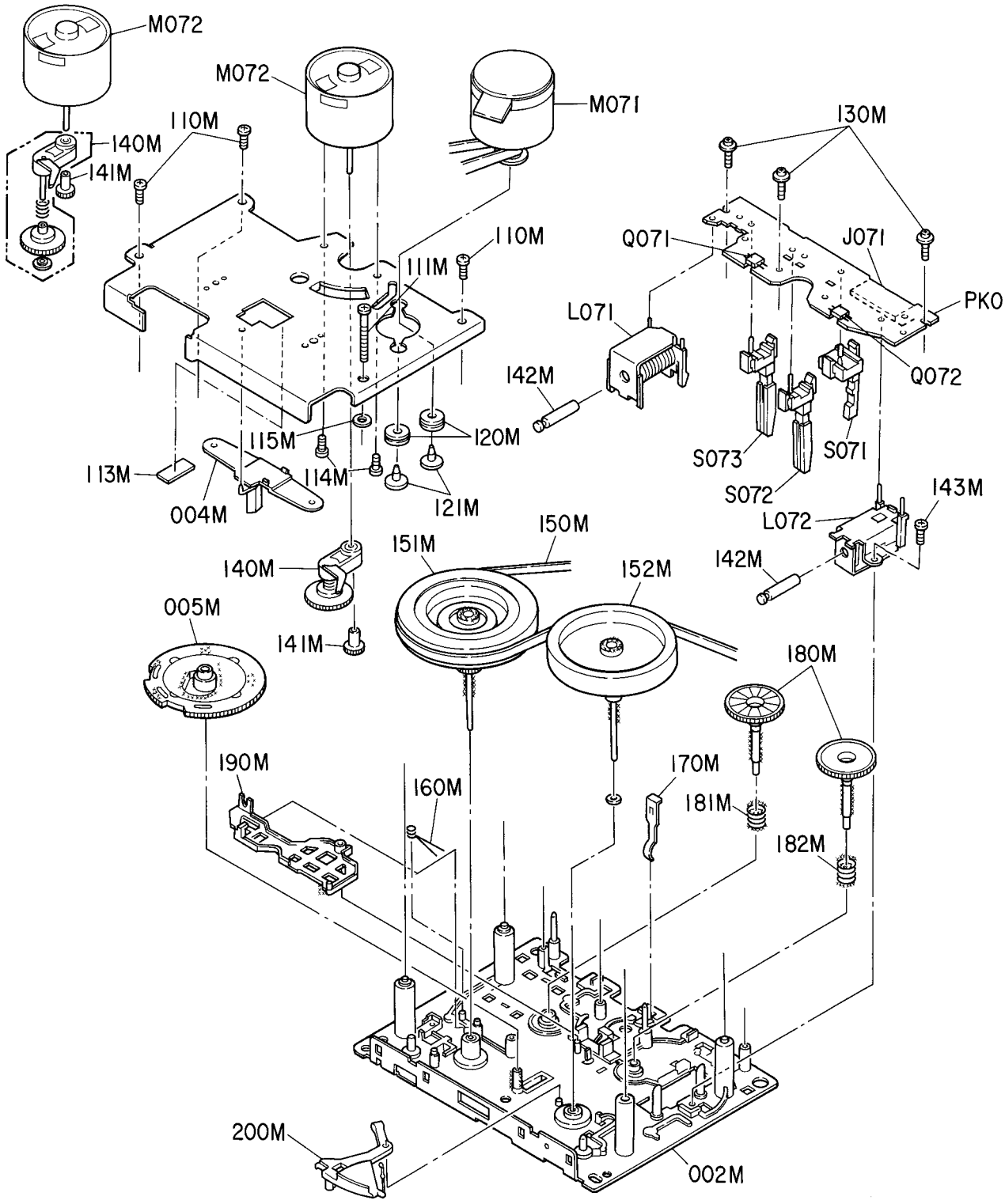
M072
M072
M071
110M
140M
141M
110M
111M
130M
Q071
J071
PK01
L071
142M
Q072
S073
S071
S072
143M
L072
142M
113M
004M
115M
114M
120M
121M
150M
151M
152M
140M
005M
141M
180M
190M
160M
170M
181M
182M
200M
002M

ELECTRICAL PARTS LIST

AD / DA PANEL (PA03)

C202	4822 126 11687	0.1µF +80%-20%
C203	4822 124 22237	10µF 16V
C204	4822 126 11687	0.1µF +80%-20%
C205	4822 124 22237	10µF 16V
C206	4822 124 22237	10µF 16V
C207	4822 126 11687	0.1µF +80%-20%
C208	4822 124 22237	10µF 16V
C210	4822 126 11687	0.1µF +80%-20%
C211	4822 124 22237	10µF 16V
C212	4822 126 11687	0.1µF +80%-20%
C213	4822 126 11687	0.1µF +80%-20%
C214	4822 126 11687	0.1µF +80%-20%
C215	4822 124 23511	100 µF ±20% 25V
C216	4822 126 11687	0.1µF +80%-20%
C217	4822 124 23511	100µF 25V
C218	4822 126 11687	0.1µF +80%-20%
C219	4822 126 11687	0.1µF +80%-20%
C220	4822 126 11687	0.1µF +80%-20%
C221	4822 124 90389	4.7µF 25V
C222	4822 124 90389	4.7µF 25V
C225	4822 126 11728	220µF / 16V
C226	4822 126 11728	220µF / 16V
C227	4822 126 11728	220µF / 16V
C228	4822 126 11728	220µF / 16V
C229	4822 122 40589	0.047µF +80%-20% 50V
C231	4822 124 90389	4.7µF 25V
C232	4822 124 90389	4.7µF 25V
C251	4822 126 12496	0.01µF +80%-20% 50V
C252	4822 126 12496	0.01µF +80%-20% 50V
C301	4822 126 11687	0.1µF +80%-20%
C302	4822 124 23777	47µF 10V
C303	4822 126 11687	0.1µF +80%-20%
C304	4822 126 11687	0.1µF +80%-20%
C305	4822 124 23777	47µF 10V
C306	4822 124 23777	47µF 10V
C307	4822 122 31069	39PF ±5% 50V
C308	4822 122 31069	39PF ±5% 50V
C309	4822 121 42327	470PF ±5% 50V
C310	4822 121 42327	470PF ±5% 50V
C311	4822 122 31069	39PF ±5% 50V
C312	4822 122 31069	39PF ±5% 50V
C313	4822 121 42327	470PF ±5% 50V
C314	4822 121 42327	470PF ±5% 50V
C315	4822 121 42712	100PF ±5% 100V
C316	4822 121 42712	100PF ±5% 100V
C317	4822 126 11687	0.1µF +80%-20%
C318	4822 126 11687	0.1µF +80%-20%
C319	4822 124 23777	47µF 10V
C320	4822 124 23777	47µF 10V
C321	4822 126 11687	0.1µF +80%-20%
C322	4822 126 11687	0.1µF +80%-20%
C323	4822 124 23777	47µF 10V
C324	4822 124 23777	47µF 10V
C325	4822 126 11687	0.1µF +80%-20%
C326	4822 126 11687	0.1µF +80%-20%
C327	4822 124 23777	47µF 10V
C328	4822 124 23777	47µF 10V
C329	4822 121 42712	100PF ±5% 100V
C330	4822 121 42712	100PF ±5% 100V
C333	4822 121 42712	100PF ±5% 100V
C334	4822 121 42712	100PF ±5% 100V
C335	4822 126 11728	220µF 16V
C336	4822 126 11728	220µF 16V
C343	4822 126 11728	220µF 16V
C344	4822 126 11728	220µF 16V
C345	4822 126 11728	220µF 16V
C346	4822 126 11728	220µF 16V
C347	4822 124 23511	100µF 25V
C348	4822 124 23511	100µF 25V
C349	4822 126 11728	220µF 16V
C350	4822 126 11728	220µF 16V
C351	4822 126 11687	0.1µF +80%-20%

R201	4822 117 10148	51Ω ±1% 1/10W
R204	4822 051 30473	47KΩ ±5% 1/16W
R205	4822 117 10148	51Ω ±1% 1/10W
R206	4822 117 10149	120Ω ±5% 1/2W (CHIP)
R207	4822 117 10149	120Ω ±5% 1/2W (CHIP)
R208⚠	4822 111 90967	4.7Ω ±5% 1/4W
R221	4822 051 30104	100KΩ ±5% 1/16W
R222	4822 051 30104	100KΩ ±5% 1/16W
R223	4822 117 10148	51Ω ±1% 1/10W
R224	4822 117 10148	51Ω ±1% 1/10W
R225	4822 117 10149	120Ω ±5% 1/2W (CHIP)
R226	4822 117 10149	120Ω ±5% 1/2W (CHIP)
R227	4822 117 10149	120Ω ±5% 1/2W (CHIP)
R228	4822 117 10149	120Ω ±5% 1/2W (CHIP)
R229	4822 051 30223	22KΩ ±5% 1/16W
R230	4822 051 30223	22KΩ ±5% 1/16W
R231	4822 051 30222	2.2KΩ ±5% 1/16W
R232	4822 051 30222	2.2KΩ ±5% 1/16W
R233	4822 116 83227	1KΩ ±1% 1/10W
R234	4822 116 83227	1KΩ ±1% 1/10W
R235	4822 116 83211	1.8KΩ ±5% 1/16W
R236	4822 116 83211	1.8KΩ ±5% 1/16W
R237	4822 117 10147	47KΩ ±1% 1/10W
R238	4822 117 10147	47KΩ ±1% 1/10W
R301⚠	4822 111 90967	4.7Ω ±2% 1/4W FUSE
R303⚠	4822 111 90967	4.7Ω ±2% 1/4W FUSE
R304⚠	4822 111 90967	4.7Ω ±2% 1/4W FUSE
R305	4822 117 10147	47KΩ ±1% 1/10W
R306	4822 117 10147	47KΩ ±1% 1/10W
R307	4822 116 83232	8.2KΩ ±1% 1/10W
R308	4822 116 83232	8.2KΩ ±1% 1/10W
R309	4822 117 10147	47KΩ ±1% 1/10W
R310	4822 117 10147	47KΩ ±1% 1/10W
R311	4822 116 83232	8.2KΩ ±1% 1/10W
R312	4822 116 83232	8.2KΩ ±1% 1/10W
R313	4822 116 83232	8.2KΩ ±1% 1/10W
R314	4822 116 83232	8.2KΩ ±1% 1/10W
R315	4822 050 21021	100Ω ±5% 1/4W
R316	4822 050 21021	100Ω ±5% 1/4W
R317	4822 116 83232	8.2KΩ ±1% 1/10W
R318	4822 116 83232	8.2KΩ ±1% 1/10W
R319	4822 111 91366	5.6KΩ ±1% 1/10W
R320	4822 111 91366	5.6KΩ ±1% 1/10W
R321	4822 116 82735	7.5KΩ ±1% 1/10W
R322	4822 116 82735	7.5KΩ ±1% 1/10W

R323	4822 111 91366	5.6KΩ ±1% 1/10W
R324	4822 111 91366	5.6KΩ ±1% 1/10W
R325	4822 051 30332	3.3KΩ ±5% 1/16W
R326	4822 051 30332	3.3KΩ ±5% 1/16W
R327	4822 051 30151	150Ω ±5% 1/16W
R328	4822 051 30151	150Ω ±5% 1/16W
R329	4822 051 30152	1.5KΩ ±5% 1/16W
R330	4822 051 30152	1.5KΩ ±5% 1/16W
R331	4822 051 30101	100Ω ±5% 1/16W
R332	4822 051 30101	100Ω ±5% 1/16W
R333	4822 051 30152	1.5Ω ±5% 1/16W
R334	4822 051 30152	1.5Ω ±5% 1/16W
R335	4822 117 10105	1MΩ ±5% 1/16W
R336	4822 117 10105	1MΩ ±5% 1/16W
R337⚠	4822 115 90166	10Ω ±5% 1/4W FUSE
R338⚠	4822 115 90166	10Ω ±5% 1/4W FUSE
R339⚠	4822 115 90166	10Ω ±5% 1/4W FUSE
R340⚠	4822 115 90166	10Ω ±5% 1/4W FUSE
R341	4822 051 30101	100Ω ±5% 1/16W
R342	4822 051 30101	100Ω ±5% 1/16W
R343	4822 116 30272	2.7KΩ ±5% 1/16W
R344	4822 116 30272	2.7KΩ ±5% 1/16W
R345	4822 051 30101	100Ω ±5% 1/16W
R346	4822 051 30101	100Ω ±5% 1/16W
R347	4822 051 30223	22KΩ ±5% 1/16W
R348	4822 051 30223	22KΩ ±5% 1/16W
R349	4822 051 30473	47KΩ ±5% 1/16W
R350	4822 051 30153	15KΩ ±5% 1/16W
R351	4822 051 30104	100KΩ ±5% 1/16W
R352	4822 111 91358	24KΩ ±1% 1/10W
R363	4822 051 30102	1KΩ ±5% 1/16W
R364	4822 051 30102	1KΩ ±5% 1/16W
R365	4822 051 30102	1KΩ ±5% 1/16W
R366	4822 051 30102	1KΩ ±5% 1/16W
R371	4822 117 30105	1MΩ ±5% 1/16W
R372	4822 117 30105	1MΩ ±5% 1/16W
R373	4822 117 30105	1MΩ ±5% 1/16W
R374	4822 117 30105	1MΩ ±5% 1/16W
R381⚠	4822 116 82487	0Ω ±5% 1/16W
R382⚠	4822 116 82487	0Ω ±5% 1/16W
R383⚠	4822 116 82487	0Ω ±5% 1/16W
R385⚠	4822 116 82487	0Ω ±5% 1/16W
R387	4822 116 82487	0Ω ±5% 1/16W

L201	4822 157 53872	10µH
L203	4822 157 53872	10µH
L205	4822 157 53872	10µH
L301	4822 157 70269	220µH
L302	4822 157 70269	220µH

D221	4822 130 81395	MA714 (CHIP)
D222	4822 130 81395	MA714 (CHIP)
Q201	4822 209 31904	AK5326 (A/D CONVERTER)
Q202	4822 209 31935	TC74HC374AF FLAT
Q203	4822 209 82377	CMOS 74HC00 FLAT
Q204	4822 209 63385	NJM78L05UA (CHIP) REG
Q205	4822 209 31903	NJM79L05UA (CHIP) REG
Q206	4822 130 60326	DTA144EK
Q221	4822 209 83358	NJM072M
Q222	4822 209 83358	NJM072M
Q301	4822 209 30438	SAA7350 BS D/A CONVERTER
Q302	4822 209 31906	SM5840FS (NPC)
Q303	4822 209 83359	NJM5532M
Q304	4822 209 83359	NJM5532M
Q305	4822 209 83359	NJM5532M
Q306	4822 209 83359	NJM5532M
Q307	4822 130 42842	2SK372 (GR,BL)
Q308	4822 130 42842	2SK372 (GR,BL)
Q309	4822 130 61074	2SA812 (M5B,M6B) CHIP
Q311	4822 130 42842	2SK372 (GR,BL)
Q312	4822 130 42842	2SK372 (GR,BL)
Q313	4822 130 42842	2SK372 (GR,BL)
Q314	4822 130 42842	2SK372 (GR,BL)

Miscellaneous

J301		PLUG 6P S6B-XH-A
J302	4822 267 31582	PLUG 11P S11B-XH-A
J303		PLUG 6P S6B-XH-A

FRONT FLD / KEY SW PANEL (PD03)

CD01	4822 124 22318	10µF 16V
CD02	4822 122 40617	0.1µF +80%-20% 50V
CD03	4822 124 80397	47µF 16V

GD01	4822 111 92126	47KΩX10 ± 5% 1/8W COMPO.
GD02	4822 111 92125	47KΩX9 ± 5% 1/8W COMPO.
GD03	4822 111 92124	47KΩX8 ± 5% 1/8W COMPO.
GD04	4822 111 92123	47KΩX7 ± 5% 1/8W COMPO.

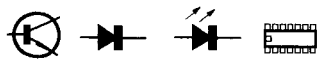

DD01	4822 130 82964	LT3G8B GREEN 3O
DD02	4822 130 80326	LT3D8B RED 3O
DD03	4822 130 80326	LT3D8B RED 3O
DD04	4822 130 33305	1SS176, MA165, 1SS254 30V 0.1A
DD05	4822 130 33305	1SS176, MA165, 1SS254 30V 0.1A
DD06	4822 130 33305	1SS176, MA165, 1SS254 30V 0.1A
QD01	4822 209 31937	µPD75238 FEUTUER µ- COM
QD02	4822 130 81254	GP1U520X 36.0KHZ IR-RECIEVER
QD03	4822 130 61227	DTA114ES

Miscellaneous

SD01	4822 276 20508	PUSH SWITCH
SD02	4822 276 20508	PUSH SWITCH
SD03	4822 276 20508	PUSH SWITCH
SD04	4822 276 20508	PUSH SWITCH
SD05	4822 276 20508	PUSH SWITCH
SD06	4822 276 20508	PUSH SWITCH
SD08	4822 276 20508	PUSH SWITCH
SD09	4822 276 20508	PUSH SWITCH
SD10	4822 276 20508	PUSH SWITCH
SD11	4822 276 20508	PUSH SWITCH
SD12	4822 276 20508	PUSH SWITCH
SD13	4822 276 20508	PUSH SWITCH
SD14	4822 276 20508	PUSH SWITCH
SD15	4822 276 20508	PUSH SWITCH
SD16	4822 276 20508	PUSH SWITCH
SD17	4822 276 20508	PUSH SWITCH
SD19	4822 276 20508	PUSH SWITCH
SD20	4822 276 20508	PUSH SWITCH
SD21	4822 276 20508	PUSH SWITCH
SD22	4822 276 20508	PUSH SWITCH
SD23	4822 276 20508	PUSH SWITCH
SD24	4822 276 20508	PUSH SWITCH
SD31	4822 273 10258	ROTARY SWITCH TIMER STANDBY
SD32	4822 273 10257	ROTARY SWITCH DOLBY
SD33	4822 273 10259	ROTARY SWITCH INPUT SELEC TOR
JDO1	4822 265 31036	JACK CARD FIT CONNECTOR 25P
VDO1	4822 130 91203	FL DISPLAY UNIT FIP16CM7R
WD01	4822 321 61807	JUMPER LEAD 25P CARD TYPE
XDO1	4822 242 72194	4.19MHZ CERAMIC VIB.

MAIN PANEL (PG03)

C031	4822 124 22274	4.7µF 50V
C032	4822 124 90352	10µF 16V
C033	4822 124 90357	2.2µF 50V
C451	4822 124 22277	470µF 16V
C601	4822 124 22274	4.7µF 50V
C602	4822 124 22274	4.7µF 50V
C603	4822 124 22274	4.7µF 50V
C604	4822 124 22274	4.7µF 50V
C609	4822 124 23445	0.56µF 50V
C610	4822 124 23445	0.56µF 50V
C613	4822 124 23112	10µF 16V BP
C622	4822 124 90354	100µF 16V
C623	4822 124 90354	100µF 16V
C635	4822 124 90364	220µF 16V
C636	4822 124 90364	220µF 16V
C639	4822 126 10408	220PF
C640	4822 126 10408	220PF
C721	4822 124 22274	4.7µF 50V
C722	4822 124 22274	4.7µF 50V
C726	4822 124 41539	47µF 16V
C727	4822 124 41539	47µF 16V
C728	4822 124 90364	220µF 16V
C729	4822 124 90364	220µF 16V
C731	4822 124 90354	100µF 16V
C732	4822 122 40589	0.047µF +80%-20% 50V
C733	4822 122 40589	0.047µF +80%-20% 50V
C740	4822 122 40617	0.1µF +80-20% 50V
C741	4822 122 40617	0.1µF +80-20% 50V
C742	4822 122 40617	0.1µF +80-20% 50V
C751	4822 126 10364	100PF ± 10%
C752	4822 126 10364	100PF ± 10%
C753	4822 124 22274	4.7µF 50V
C754	4822 124 22274	4.7µF 50V
C756	4822 124 90364	220µF 16V
C757	4822 124 90364	220µF 16V
C761	4822 126 10408	220PF ± 10%
C762	4822 126 10408	220PF ± 10%
C763	4822 126 10408	220PF ± 10%
C764	4822 126 10408	220PF ± 10%
C802	4822 124 23518	2200µF 35V
C809	4822 124 22571	10µF 50V
C812	4822 124 90352	10µF 16V
C813	4822 124 90352	10µF 16V
C841	4822 124 90364	220µF 16V
C842	4822 124 90364	220µF 16V
CA01	4822 124 90352	10µF 16V
CA02	4822 122 40589	0.047µF +80%-20% 50V
CA04	4822 122 40617	0.1µF +80%-20% 50V
CA05	4822 122 40589	0.047µF +80%-20% 50V
CA06	4822 124 90362	22 µF ± 20% 50V
CA07	4822 126 10364	100PF ± 10%
CA08	4822 122 40617	0.1µF +80%-20% 50V
CA09	4822 124 90362	22µF ± 20% 50V
CA12	4822 122 40617	0.1µF +80-20% 50V
CA13	4822 126 10364	100PF ± 10%
CA17	4822 122 40617	0.1µF +80%-20% 50V
CA18	4822 122 40617	0.1µF +80%-20% 50V
CA19	4822 122 40617	0.1µF +80%-20% 50V
CH01	4822 124 90364	220 µF 16V
CH02	4822 124 90364	220 µF 16V
CH03	4822 124 22274	4.7µF 50V

CH04	4822 124 22274	4.7µF 50V
CH07	4822 122 33795	4700PF ±20%
CH08	4822 122 33795	4700PF ±20%
CL01	4822 124 90352	10µF 16V
CL02	4822 124 90352	10µF 16V
CL03	4822 124 90352	10µF 16V
CL04	4822 124 90352	10µF 16V
CL05	4822 124 90354	100µF 16V
CL06	4822 124 90354	100µF 16V
CM01	4822 124 90354	100µF 16V
CM21	4822 122 40589	0.047µF +80%-20% 50V
CM22	4822 122 40589	0.047µF +80%-20% 50V
CM51	4822 122 40589	0.047µF +80%-20% 50V
CM52	4822 122 40589	0.047µF +80%-20% 50V
CQ01	4822 124 22703	0.22µF 50V
CQ02	4822 124 22273	0.47µF 50V
CQ04	4822 122 30103	0.022µF +80%-20% 50V
CQ08	4822 124 90354	100µF 16V
CQ10	4822 122 30103	0.022µF +80%-20% 50V
CQ21	4822 126 10364	100PF ±10%
CQ22	4822 122 30103	0.022µF +80%-20% 50V
CQ51	4822 124 90352	10µF 16V
CQ52	4822 124 90352	10µF 16V
CQ53	4822 124 41539	47µF 16V
CQ54	4822 124 41539	47µF 16V
CQ55	4822 124 90352	10µF 16V
CR01	4822 124 90352	10µF 16V
CR02	4822 122 30103	0.022µF +80%-20% 50V
CR03	4822 122 40617	0.1µF +80%-20% 50V
CR04	4822 126 10364	100PF +80%-20% 50V
CU01	4822 124 41539	47µF 16V
CU02	4822 122 40617	0.1µF +80%-20% 50V
CU21	4822 124 41539	47µF 16V
CU22	4822 122 40617	0.1µF +80%-20% 50V
CU31	4822 124 41543	1µF 50V
CU51	4822 124 90354	100µF 16V
CU52	4822 124 22571	10µF 50V
CU53	4822 124 90357	2.2µF 50V
CU54	4822 124 90354	100µF16V
CU81	4822 124 41539	47µF 16V
CU82	4822 122 40617	0.1µF +80%-20% 5V

GU01	4822 111 91276	10KΩX6 COMPO.
GU81	4822 111 91276	10KΩX6 COMPO.
R633	4822 100 11351	10KΩ POTM. PLAY (L)
R634	4822 100 11351	10KΩ POTM. PLAY (R)
R643	4822 100 11372	47KΩ POTM. FRE. RESP. (L)
R644	4822 100 11372	47KΩ POTM. FRE. RESP. (R)
R645	4822 100 11641	470KΩ POTM. FRE. RESP. (L)
R646	4822 100 11641	470KΩ POTM. FRE. RESP. (R)
R705⚠	4822 115 90166	10Ω ±2% 1/4W FUSE
R728⚠	4822 115 90166	10Ω ±2% 1/4W FUSE
R729⚠	4822 115 90166	10Ω ±2% 1/4W FUSE
R731	4822 100 11948	20KΩ (A)X2 MOTOR VOLUME
R732⚠	4822 111 90967	4.7Ω ±2% 1/4W FUSE
R751⚠	4822 115 90166	10Ω ±2% 1/4W FUSE
R752⚠	4822 115 90166	10Ω ±2% 1/4W FUSE
R801⚠	4822 116 21086	1Ω ±5% 1/2W FUSE
R802⚠	4822 116 21088	2.2Ω ±5% 1/2W FUSE
R803⚠	4822 116 21086	1Ω ±5% 1/2W FUSE
R804⚠	4822 116 21086	1Ω ±5% 1/2W FUSE
R805⚠	4822 116 21086	1Ω ±5% 1/2W FUSE
R806⚠	4822 116 60307	1Ω ±5% 1/4W FUSE
R810⚠	4822 115 90166	10Ω ±2% 1/4W FUSE
R813⚠	4822 115 90166	10Ω ±2% 1/4W FUSE
R814⚠	4822 115 90166	10Ω ±2% 1/4W FUSE
RA13	4822 050 23909	39Ω ±5% 1/4W
RA15	4822 050 23909	39Ω ±5% 1/4W
RH02⚠	4822 115 90166	10Ω ±2% 1/4W FUSE
RH04⚠	4822 115 90166	10Ω ±2% 1/4W FUSE
RL05	4822 100 20681	2.2KΩ POTM. METER (L)
RL06	4822 100 20681	2.2KΩ POTM. METER (R)
RL09⚠	4822 115 90166	10Ω ±2% 1/4W FUSE
RL10⚠	4822 115 90166	10Ω ±2% 1/4W FUSE
RM01⚠	4822 053 10228	2.2Ω ±5% 1W
RM23⚠	4822 111 90967	4.7Ω ±2% 1/4W FUSE
RM57⚠	4822 111 90967	4.7Ω ±2% 1/4W FUSE
RM88	4822 116 60355	33Ω ±5% 1W
RQ17⚠	4822 053 10151	150Ω ±5% 1W
RQ61⚠	4822 115 90166	10Ω ±2% 1/4W FUSE
RQ62⚠	4822 115 90166	10Ω ±2% 1/4W FUSE
RR01	4822 050 21021	100Ω ±5% 1/4W

L451	4822 242 73843	FILTER EMI DSS306-91-F-223Z
L701	4822 280 20183	RELAY, 12V SZ-2103
L711	4822 526 10543	FERRITE CORE
L712	4822 526 10543	FERRITE CORE
L713	4822 526 10543	FERRITE CORE
L714	4822 526 10543	FERRITE CORE
L715	4822 526 10543	FERRITE CORE
L716	4822 526 10543	FERRITE CORE
L717	4822 526 10543	FERRITE CORE
L718	4822 526 10543	FERRITE CORE
L719	4822 526 10543	FERRITE CORE
LA01	4822 142 60388	PULS TRANSF.
LA02	4822 157 53813	CHOKE COIL 10µH
LA03	4822 157 53585	CHOKE COIL 47µH

D032	4822 130 33305	1SS176, MA165, 1SS254 30V 0.1 A
D641	4822 130 33305	1SS176, MA165, 1SS254 30V 0.1 A
D701⚠	4822 130 80839	S5688G VRM=400V IO=1A
D702	4822 130 33305	1SS176, MA165, 1SS254 30V 0.1 A
D703	4822 130 33305	1SS176, MA165, 1SS254 30V 0.1 A
D817	4822 130 80317	5.1V ZENER 04AZ5.1-Y
D818	4822 130 80273	8.2V ZENER 04AZ8.2-Z
D819	4822 130 80273	8.2V ZENER 04AZ8.2-Z
D822⚠	4822 130 80839	S5688G VRM=400V IO=1A
D823	4822 130 33305	1SS176, MA165, 1SS254 30V 0.1A
D824	4822 130 33305	1SS176, MA165, 1SS254 30V 0.1A
D828⚠	4822 130 80839	S5688G VRM=400V IO=1A
D841⚠	4822 130 80839	S5688G VRM=400V IO=1A
DH01	4822 130 33305	1SS176, MA165, 1SS254 30V 0.1 A
DH02	4822 130 33305	1SS176, MA165, 1SS254 30V 0.1 A
DH03	4822 130 33305	1SS176, MA165, 1SS254 30V 0.1 A
DH04	4822 130 33305	1SS176, MA165, 1SS254 30V 0.1 A
DM01	4822 130 33305	1SS176 ,MA165, 1SS254 30V 0.1 A

DM21	4822 130 80132	3.9V ZENER 04AZ3.9-X
DM22	4822 130 80273	8.2V ZENER 04AZ8.2-Z
DM23	4822 130 33305	1SS176, MA165, 1SS254 30V 0.1A
DM51	4822 130 80273	8.2V ZENER 04AZ8.2-Z
DM52	4822 130 33305	1SS176, MA165, 1SS254 30V 0.1A
DR01	4822 130 33305	1SS176, MA165, 1SS254 30V 0.1A
DU11	4822 130 80132	3.9V ZENER 04AZ3.9-X
DU41	4822 130 33305	1SS176, MA165, 1SS254 30V 0.1A
DU51	4822 130 33305	1SS176, MA165, 1SS254 30V 0.1A
DU53	4822 130 33305	1SS176, MA165, 1SS254 30V 0.1A
DU61	4822 130 33305	1SS176, MA165, 1SS254 30V 0.1A
DU62⚠	4822 130 80839	S5688G VRM=400V IO=1A
Q031	4822 209 31924	TA75358CP OP AMP
Q601	4822 209 62251	CXA1330 DOLBY B/C NR
Q602	4822 209 73064	NJM-2068-DD OP AMP
Q611	4822 130 61189	DTA114TS
Q612	4822 130 60588	DTC114ES
Q613	4822 130 61227	DTA114ES
Q641	4822 130 61723	DTC323TS 2.2K
Q642	4822 130 61723	DTC323TS 2.2K
Q671	4822 130 60588	DTC114ES
Q672	4822 130 60588	DTC114ES
Q701	4822 130 63189	2SD2159 (U,V)
Q702	4822 130 61189	DTC114TS
Q720	4822 209 61187	BA15218
Q731	4822 209 73287	LB1630
Q751	4822 209 73064	NJM-2068-DD
Q761	4822 130 61892	2SD2144S (U,R)
Q762	4822 130 61892	2SD2144S (U,R)
Q763	4822 130 61892	2SD2144S (U,R)
Q764	4822 130 61892	2SD2144S (U,R)
Q765	4822 130 61892	2SD2144S (U,R)
Q766	4822 130 61892	2SD2144S (U,R)
Q767	4822 130 61892	2SD2144S (U,R)
Q768	4822 130 61892	2SD2144S (U,R)
Q806	4822 130 63189	2SD2159 (U,V)
Q807	4822 130 63188	2SB1425 (E,U)
Q809	4822 130 61189	DTC114TS
Q810	4822 130 61189	DTC114TS
Q811⚠	4822 209 31925	PQ05RA111A, 5V
Q812⚠	4822 209 62941	NJM78M08FA 0.5A 8V
Q843	4822 130 61189	DTC114TS
QA01	4822 209 63182	74HCU04
QA02	4822 130 60588	DTC 114ES
QA03	4822 130 42715	2SA608SP, 2SA1048, 2SA1309, 2SA933S
QA04	4822 130 4229	2SC536SP, 2SC2458, 2SC3311, 2SC1740S
QH02	4822 209 61187	BA15218
QH05	4822 130 61723	DTC323TS 2.2K
QH06	4822 130 61723	DTC323TS 2.2K
QH07	4822 130 61723	DTC323TS 2.2K
QH08	4822 130 61723	DTC323TS 2.2K
QL01	4822 209 82513	BA6138 METER AC/DC AMP
QL02	4822 209 61187	BA15218
QM01	4822 130 61189	DTC114TS
QM02	4822 130 61189	DTA114TS
QM03	4822 130 61725	2SD2010N
QM04	4822 130 61189	DTC114TS
QM21	4822 209 61188	BA6219
QM22	4822 130 61189	DTC114TS
QM51	4822 209 30193	LB1641
QM81	4822 130 61189	DTC114TS
QM82	4822 130 61189	DTC114TS
QM83	4822 130 61189	DTC114TS
QM84	4822 130 61189	DTC114TS
QM85	4822 130 60173	2SC2060 (Q,R)
QM86	4822 130 60173	2SC2060 (Q,R)
QM87	4822 130 63188	2SB1425 (E,U)
QQ01	4822 209 83706	BA335PK
QQ03	4822 130 61189	DTC114TS
QQ04	4822 130 61189	DTC114TS
QQ05	4822 130 61189	DTC114TS
QQ06	4822 130 61189	DTC114TS
QQ21	4822 130 42298	2SC536SP, 2SC2458, 2SC3311, 2SC1740S
QQ51	4822 209 61187	BA15218
QQ52	4822 130 61189	DTC114TS
QR01	4822 130 42715	2SA608SP, 2SA1048, 2SA1309, 2SA933S
QR02	4822 130 42298	2SC536SP, 2SC2458, 2SC3311, 2SC1740S
QR51	4822 130 42594	DTC144ES
QR52	4822 130 42594	DTC144ES
QU01	4822 209 31936	µPD75518 MECHA DRIVE µ - COM
QU02	4822 130 61189	DTC114TS
QU03	4822 130 61227	DTA114ES
QU04	4822 130 61227	DTA114ES
QU11	4822 130 61227	DTA114ES
QU12	4822 130 61189	DTA114TS
QU13	4822 130 61189	DTC114TS
QU14	4822 130 61189	DTC114TS
QU16	4822 130 61189	DTA114TS
QU17	4822 130 61189	DTC114TS
QU18	4822 130 61227	DTA114ES
QU19	4822 130 42298	2SC536SP, 2SC2458, 2SC3311, 2SC1740S
QU21	4822 209 31932	74HC125AP
QU22	4822 130 60588	DTC114ES
QU32	4822 130 61189	DTC114TS
QU33	4822 130 42682	DTA144ES
QU52	4822 130 61227	DTA114ES
QU53	4822 130 60588	DTC114ES
QU54	4822 130 42682	DTA144ES
QU55	4822 130 61189	DTC114TS
QU56	4822 130 61189	DTC114TS
QU57	4822 130 61189	DTC114TS
QU61	4822 130 60588	DTC114ES
QU62	4822 130 61227	DTA114ES
QU63	4822 130 61725	2SD2010N
QU64	4822 130 60588	DTC114ES
QU65	4822 130 61227	DTA114ES
QU81	4822 209 31923	BR93LC46 EEPROM

Miscellaneous

J311	4822 265 31034	JACK 6P
J312	4822 265 31035	JACK 11P
J313	4822 265 31034	JACK 6P
J421	4822 265 31039	JACK 50P
J740	4822 265 31045	RCA JACK 2P
J741	4822 265 31045	RCA JACK 2P
J742	4822 265 31045	RCA JACK 2P
JA01	4822 265 31042	OPTICAL CONNECTOR PLT102, OUTPUT

HEADPHONE VOL / JACK PANEL (PH03)

Miscellaneous

JA02	4822 265 31043	OPTICAL CONNECTOR TORX176 INPUT
JA03	4822 265 31044	RCA JACK 2P
JR01	4822 265 20542	RCA JACK 2P
JU02	4822 265 51347	JACK 25P CARD FIT CONNECTOR
SR01	4822 277 21559	SLIDE SWITCH REMOTE SELECT IN/EXT
XU01	4822 242 72194	4.19MHZ CERAMIC VIB.

CH31	4822 122 33795	4700PF ± 20%
CH32	4822 122 33795	4700PF ± 20%
CH33	4822 122 40617	0.1µF +80%-20% 50V

RH01	4822 100 11946	20KΩ (A)X2 VARIABLE H.P VOL.

LH31	4822 526 10543	FERRITE CORE
LH32	4822 526 10543	FERRITE CORE
LH33	4822 526 10543	FERRITE CORE

Miscellaneous

JH02	4822 265 20555	PHONE JACK

TRAY WIRE CONNECTIV / SERVO PANEL (PM03)

C001	4822 124 22703	0.22µF 50V
C002	4822 124 40721	2.2µF 50V
C004	4822 126 12496	0.01µF +80%-20% 50V
C005	4822 124 41537	220µF ± 20% 6.3V
C006	4822 122 40617	0.1µF +80%-20% 50V
C007	4822 122 40617	0.1µF +80%-20% 50V

R018	4822 116 82752	10KΩ ± 1% 1/6W
R019	4822 116 82752	10KΩ ± 1% 1/6W
R031 ⚠	4822 050 21501	150Ω ± 5% 1/4W
R036	4822 100 20539	22KΩ POTM. Q. SENSOR
RS02	4822 100 11235	4.7KΩ POTM. SIDE A
RS03	4822 111 92128	130Ω THERMISTOR
RS08	4822 100 11452	470Ω POTM. SIDE B

D001	4822 130 33305	1SS176, MA165, 1SS254 30V 0.1A
D002	4822 130 82609	2.0V ZENER MTZ 2.0B
D003	4822 130 82609	2.0V ZENER MTZ 2.0B
Q001	4822 209 31907	NJM2902N
Q011	4822 130 42298	2SC536SP, 2SC2458, 2SC3311, 2SC1740S
QS01	4822 209 63382	74HC4066
QS02	4822 130 61188	DTC144TS
QS03	4822 130 42298	2SC536SP, 2SC2458, 2SC3311, 2SC1740S

POWER SUPPLY PANEL (PP03)

C821	4822 122 30103	0.022µF +80%-20% 50V
C822	4822 122 30103	0.022µF +80%-20% 50V
C823	4822 122 30103	0.022µF +80%-20% 50V
C824	4822 122 40589	0.047µF +80%-20% 50V
C825	4822 122 40589	0.047µF +80%-20% 50V
C826	4822 122 30103	0.022µF +80%-20% 50V
C827	4822 122 30103	0.022µF +80%-20% 50V
C851 ⚠	4822 122 33276	0.01µF ± 20% 400V
C852 ⚠	4822 122 33276	0.01µF ± 20% 400V
C853 ⚠	4822 122 33276	0.01µF ± 20% 400V
C861 ⚠	4822 122 33276	0.01µF ± 20% 400V
C862 ⚠	4822 122 33276	0.01µF ± 20% 400V

L801 ⚠	4822 146 21697	MAINS TRANSFORMER 220V/230V/240V [/00/01/05/10]
L801 ⚠	4822 146 21699	MAINS TRANSFORMER 110V/120V/220V 240V [/01]
L801 ⚠	4822 146 21698	MAINS TRANSFORMER 100V/120V [BK01]
L802 ⚠	4822 242 72523	FILTER EMI UF1922S-102Y1R0-02

D801 ⚠	4822 130 32508	RL103E(RECTRON)/DSF10C
D802 ⚠	4822 130 32508	RL103E(RECTRON)/DSF10C
D803 ⚠	4822 130 32508	RL103E(RECTRON)/DSF10C
D804 ⚠	4822 130 32508	RL103E(RECTRON)/DSF10C
D805 ⚠	4822 130 32508	RL103E(RECTRON)/DSF10C
D806 ⚠	4822 130 32508	RL103E(RECTRON)/DSF10C
D807 ⚠	4822 130 32508	RL103E(RECTRON)/DSF10C
D808 ⚠	4822 130 32508	RL103E(RECTRON)/DSF10C
D809 ⚠	4822 130 32508	RL103E(RECTRON)/DSF10C
D810 ⚠	4822 130 32508	RL103E(RECTRON)/DSF10C
D811 ⚠	4822 130 32508	RL103E(RECTRON)/DSF10C
D812 ⚠	4822 130 32508	RL103E(RECTRON)/DSF10C
D815 ⚠	4822 130 80839	S5688G VRM= 400V IO=1A
D816 ⚠	4822 130 80839	S5688G VRM=400V IO=1 A
D820 ⚠	4822 130 32508	RL103E(RECTRON)/DSF10C
D821 ⚠	4822 130 32508	RL103E(RECTRON)/DSF10C
DU54 ⚠	4822 130 80839	S5688G VRM=400V IO=1 A
DU55 ⚠	4822 130 80839	S5688G VRM=400V IO=1 A

Miscellaneous

F801 ⚠	4822 252 31043	FUSE 630MA 250V BS LISTED [/00/01/05/10]
F801 ⚠	4822 253 30248	FUSE 1.25A 125V UL/ CSA [BK01]
S851 ⚠	4822 276 13242	PUSH SWITCH MAINS TV-3
J093 ⚠	4822 267 31416	JACK, AC INLET

DC POWER SUPPLY PANEL (PS03)

C871 ⚠	4822 122 40589	0.047µF +80%-20% 50V
C872 ⚠	4822 124 80395	10µF 16V
C873 ⚠	4822 122 40589	0.047µF +80%-20% 50V
C874 ⚠	4822 124 80395	10µF 16V
C875	4822 122 40589	0.047µF +80%-20% 50V
C876	4822 124 80395	10µF 16V
C877	4822 122 40589	0.047µF +80%-20% 50V
C878	4822 124 22782	47µF 16V

D871 ⚠	4822 130 80839	S5688G VRM=400V IO=1A
D872 ⚠	4822 130 80839	S5688G VRM=400V IO=1A
D873 ⚠	4822 130 80839	S5688G VRM=400V IO=1A
Q871	4822 209 31926	PO12RA1 1A+12V
Q872	4822 209 73954	NJM7912FA 1A-12V
Q873	4822 209 31925	PO05RA111A, 5V
Q874	4822 209 31927	PO05RR11A, 5V

REC / BAL VOL PANEL (PV03)

CV01	4822 124 22318	10µF 16V
CV02	4822 124 22318	10µF 16V

RV01	4822 100 11947	50KΩ (A)X2 VARIABLE REC. VOL.
RV02	4822 100 11945	100KΩ (M/N)X2 VARIABLE M/N BAL. VOL.

READ / WRITE PANEL (PW03)

C101	4822 126 11687	0.1µF +80%-20%
C102	4822 122 32672	1µF 16V CHIP
C103	4822 124 11334	4.7µF 16V CHIP
C104	4822 126 11678	1µF ± 1% 50V
C105	4822 126 11678	1µF ± 1% 50V
C106	4822 126 11678	1µF ± 1% 50V
C107	4822 126 11678	1µF ± 1% 50V
C108	4822 126 11678	1µF ± 1% 50V
C109	4822 126 11678	1µF ± 1% 50V
C110	4822 126 11678	1µF ± 1% 50V
C111	4822 126 11678	1µF ± 1% 50V
C112	4822 124 11074	10µF 16V CHIP
C113	4822 122 32672	1µF 16V CHIP
C114	4822 122 32672	1µF 16V CHIP
C115	4822 122 32677	2.2µF 6.3V CHIP
C116	4822 122 32677	2.2µF 6.3V CHIP
C117	4822 126 12501	0.0018µF ± 10%
C118	4822 126 12501	0.0018µF ± 10%
C119	4822 124 11074	10µF 16V CHIP
C120	4822 124 11074	10µF 16V CHIP
C121	4822 124 11074	10µF 16V CHIP
C122	4822 126 11565	10000PF ± 10%
C123	4822 126 11565	10000PF ± 10%
C124	4822 126 11565	10000PF ± 10%
C125	4822 126 11565	10000PF ± 10%
C126	4822 126 11565	10000PF ± 10%
C127	4822 126 11565	10000PF ± 10%
C128	4822 126 11565	10000PF ± 10%
C129	4822 126 11565	10000PF ± 10%
C130	4822 126 11565	10000PF ± 10%
C131	4822 126 11565	10000PF ± 10%
C132	4822 126 11565	10000PF ± 10%
C133	4822 126 11687	0.1µF +80%-20%
C134	4822 126 11687	0.1µF +80%-20%
C135	4822 124 11335	63µF 10V CHIP
C137	4822 124 11335	68µF 10V CHIP
C138	4822 126 11687	0.1µF +80%-20%
C140	4822 124 11335	63µF 10V CHIP
C141	4822 126 11687	0.1µF +80%-20%
C143	4822 124 11334	4.7µF 16V CHIP
C144	4822 126 11678	1µF +80%-20%
C145	4822 126 11678	1µF +80%-20%
C150	4822 124 11335	68µF 10V CHIP
C151	4822 126 11687	0.1µF +80%-20%
C152	4822 126 11687	0.1µF 16V
C157	4822 126 11683	3300PF ± 10%
C158	4822 126 11683	3300PF ± 10%
C159	4822 126 11683	3300PF ± 10%
C160	4822 126 11683	3300PF ± 10%
C161	4822 126 11683	3300PF ± 10%
C162	4822 126 11683	3300PF ± 10%
C163	4822 126 11683	3300PF ± 10%
C164	4822 126 11683	3300PF ± 10%
C165	4822 126 11683	3300PF ± 10%
C181	4822 126 11687	0.1µF +80%-20%
C182	4822 126 11687	0.1µF +80%-20%
C183	4822 126 11687	0.1µF +80%-20%
C184	4822 126 11687	0.1µF +80%-20%
C185	4822 126 11687	0.1µF +80%-20%
C190	4822 126 12503	0.33µF +80%-20% 16V

C191	4822 126 12503	0.33µF +80%-20% 16V
C192	4822 126 11681	1000PF ± 10%
C193	4822 126 12498	39PF ± 5%
C194	4822 126 11566	2200PF ± 10%
C195	4822 126 11566	2200PF ± 10%
C196	4822 126 11687	0.1µF +80%-20%

R101	4822 100 11636	4.7KΩ ± 25% 1/10W POTM A. BIAS
R102	4822 100 11636	4.7KΩ ± 25% 1/10W POTM A. BIAS
R103	4822 051 30473	47KΩ ± 5% 1/16W
R104	4822 051 30473	47KΩ ± 5% 1/16W
R105	4822 051 30303	30KΩ ± 5% 1/16W
R106	4822 051 30303	30KΩ ± 5% 1/16W
R107	4822 051 30154	150KΩ ± 5% 1/16W
R108	4822 051 30154	150KΩ ± 5% 1/16W
R109	4822 100 11636	4.7KΩ ± 25% 1/10W POTM. A. BIAS
R110	4822 100 11636	4.7KΩ ± 25% 1/10W POTM. A. BIAS
R111	4822 051 30109	10Ω ± 5% 1/16W
R112	4822 051 30109	10Ω ± 5% 1/16W
R113	4822 051 30109	10Ω ± 5% 1/16W
R114	4822 051 30109	10Ω ± 5% 1/16W
R115	4822 051 30561	560Ω ± 5% 1/16W
R116	4822 051 30561	560Ω ± 5% 1/16W
R120	4822 116 82487	0Ω
R121	4822 051 30682	6.8KΩ ± 5% 1/16W
R122	4822 051 30683	68KΩ ± 5% 1/16W
R125	4822 051 30104	100KΩ ± 5% 1/16W
R127	4822 051 30102	1KΩ ± 5% 1/16W
R128	4822 051 30102	1KΩ ± 5% 1/16W
R129	4822 051 30479	47Ω ± 5% 1/16W
R130	4822 051 30471	470Ω ± 5% 1/16W
R131	4822 051 30331	330Ω ± 5% 1/16W
R132	4822 051 30561	560Ω ± 5% 1/16W
R133	4822 116 83221	8.2KΩ ± 5% 1/16W
R134	4822 116 83208	12KΩ ± 5% 1/16W
R135	4822 100 11604	1KΩ ± 25% 1/10W POTM. D. OUT
R136	4822 116 83214	39KΩ ± 5% 1/16W
R137	4822 116 83352	560Ω ± 5% 1/10W CHIP
R138	4822 116 83352	560Ω ± 5% 1/10W CHIP
R139	4822 116 83352	560Ω ± 5% 1/10W CHIP
R140	4822 116 83352	560Ω ± 5% 1/10W CHIP
R141	4822 116 83352	560Ω ± 5% 1/10W CHIP
R142	4822 116 83352	560Ω ± 5% 1/10W CHIP
R143	4822 116 83352	560Ω ± 5% 1/10W CHIP
R144	4822 116 83352	560Ω ± 5% 1/10W CHIP
R145	4822 116 83352	560Ω ± 5% 1/10W CHIP
R146	4822 051 30561	560Ω ± 5% 1/16W
R151	4822 111 92129	12Ω ± 1% 1/4W
R155	4822 111 92131	2.2Ω ± 5% 1/4W
R156	4822 111 92133	180Ω ± 5% 1/4W
R158	4822 051 30229	22Ω ± 5% 1/6W
R159	4822 051 30229	22Ω ± 5% 1/16W
R160	4822 051 30229	22Ω ± 5% 1/16W
R161	4822 051 30229	22Ω ± 5% 1/16W
R162	4822 051 30229	22Ω ± 5% 1/16W
R163	4822 051 30229	22Ω ± 5% 1/16W
R164	4822 051 30229	22Ω ± 5% 1/16W
R165	4822 051 30229	22Ω ± 5% 1/16W
R166	4822 051 30229	22Ω ± 5% 1/16W

DIGITAL PANEL (PZ03)

R167	4822 100 11941	100Ω POTM. I. REC
R171	4822 051 30472	4.7KΩ ±5% 1/16W
R172	4822 051 30472	4.7KΩ ±5% 1/16W
R180	4822 051 30102	1KΩ ±5% 1/16W
R181	4822 051 30331	330Ω ±5% 1/16W
R182	4822 051 30109	10Ω ±5% 1/16W
R183	4822 116 83211	8.2KΩ ±5% 1/16W
R184	4822 111 91077	56Ω ±5% 1/10W CHIP
R185	4822 116 83211	1.8KΩ ±5% 1/16W
R186	4822 116 83218	68Ω ±5% 1/16W
R187	4822 111 92127	40Ω THERMISTOR
R192	4822 116 83211	1.8KΩ ±5% 1/16W
R193	4822 051 30152	1.5KΩ ±5% 1/16W
R194	4822 051 30561	560Ω ±5% 1/16W
R195	4822 116 83206	120Ω ±5% 1/16W
R196	4822 051 30399	39Ω ±5% 1/16W
R197	4822 051 30399	39Ω ±5% 1/16W
R198	4822 051 30399	39Ω ±5% 1/16W
R199	4822 111 90972	0Ω ±5% 1/8W
J111	4822 116 83251	CHECKER CHIP
J112	4822 116 83251	CHECKER CHIP
J121	4822 116 83251	CHECKER CHIP
J122	4822 116 83251	CHECKER CHIP
J151	4822 116 83251	CHECKER CHIP
J152	4833 116 83251	CHECKER CHIP

L101	4822 157 70268	15µH ±20%
L102	4822 157 70268	15µH ±20%

Q101	4822 209 31918	TDA1317 (N5111B) READ AMP
Q102	4822 130 43398	2SC2712 (G)
Q103	4822 130 43398	2SC2712 (G)
Q104	4822 130 43954	2SD999 (CL,CK) CHIP
Q105	4822 130 42733	2SA1162-(G) CHIP
Q106	4822 130 43398	2SC2712 (G) CHIP
Q151	4822 209 31919	TDA1316T/N-T WRITE AMP
Q153	4822 130 62522	UN2217 (22K)
Q180	4822 130 43398	2SC2712 (G) CHIP
Q181	4822 209 62503	74HC4053 MULTI PLEXER
Q182	4822 209 31934	74HC175
Q183	4822 209 82377	74HC00 NAND GATE
Q184	4822 209 31933	74HC163
Q185	4822 209 63341	74HC02
Q190	4822 130 43398	2SC2712 (G) CHIP

Miscellaneous

J101	4822 265 31041	JACK CARD 30P
J103	4822 265 31037	JACK CARD 18P
W103	4822 321 61806	JUMPER LEAD CARD TYPE 18P

C401	4822 126 11687	0.1µF +80%-20%
C402	4822 126 11687	0.1µF +80%-20%
C403	4822 126 11687	0.1µF +80%-20%
C404	4822 126 11687	0.1µF +80%-20%
C405	4822 126 11687	0.1µF +80%-20%
C406	4822 126 11687	0.1µF +80%-20%
C409	4822 126 11687	0.1µF +80%-20%
C410	4822 126 11687	0.1µF +80%-20%
C411	4822 126 11565	10000PF ±10%
C412	4822 126 11687	0.1µF +80%-20%
C418	4822 126 11668	220PF ±5% 50V
C423	4822 124 11074	10µF 16V CHIP
C424	4822 124 11226	22µF 6.3V CHIP
C425	4822 126 11687	0.1µF +80%-20%
C426	4822 124 11332	2.2µF 50V (B.P) CHIP
C427	4822 126 11687	0.1µF +80%-20% 16V
C428	4822 126 11687	0.1µF +80%-20%
C429	4822 124 11074	10µF 16V CHIP
C430	4822 126 11687	0.1µF +80%-20%
C431	4822 124 11074	10µF 16V CHIP
C432	4822 122 33777	47PF ±5% 50V
C433	4822 126 11687	0.1µF +80%-20%
C434	4822 126 11687	0.1µF +80%-20%
C440	4822 126 11687	0.1µF +80%-20%
C441	4822 126 12504	0.039µF +80%-20% 16V
C442	4822 126 12499	0.47µF +80%-20% 16V
C443	4822 126 11687	0.1µF +80%-20%
C444	4822 126 11687	0.1µF +80%-20%
C445	4822 126 11687	0.1µF +80%-20%
C446	4822 126 11687	0.1µF +80%-20%
C447	4822 124 11074	10µF 16V CHIP
C448	4822 126 11562	100PF ±5% 50V
C449	4822 126 11687	0.1µF +80%-20% 16V
C450	4822 124 11074	10µF 16V CHIP
C457	4822 122 33753	150PF ±5% 50V
C471	4822 126 12497	7PF ±0.5PF 50V
C472	4822 126 12497	7PF ±0.5PF 50V
C473	4822 126 12497	7PF ±0.5PF 50V
C474	4822 126 12497	7PF ±0.5PF 50V

R402	4822 051 30104	100KΩ ±5% 1/16W
R411	4822 051 30222	2.2KΩ ±5% 1/16W
R413	4822 116 82487	0Ω ±5% 1/16W
R417	4822 116 82487	0Ω ±5% 1/16W
R418	4822 116 83207	1.2KΩ ±5% 1/16W
R422	4822 111 90972	0Ω ±5% 1/8W
R423	4822 051 30272	2.7KΩ ±5% 1/16W
R428	4822 116 83208	12KΩ ±5% 1/16W
R429	4822 111 92132	120Ω ±5% 1/4W
R430	4822 111 92133	180Ω ±5% 1/4W
R432	4822 051 30221	22Ω ±5% 1/16W
R434	4822 051 30473	47KΩ ±5% 1/16W
R435	4822 051 30473	47KΩ ±5% 1/16W
R441	4822 051 30103	10KΩ ±5% 1/16W
R442	4822 051 30104	100KΩ ±5% 1/16W
R443	4822 051 30222	2.2KΩ ±5% 1/16W
R444	4822 051 30222	2.2KΩ ±5% 1/16W
R445	4822 116 83207	1.2KΩ ±5% 1/16W
R447	4822 051 30104	100KΩ ±5% 1/16W
R448	4822 051 30223	22KΩ ±5% 1/16W

R449	4822 051 30223	22KΩ ±5% 1/16W
R450	4822 051 30103	10KΩ ±5% 1/16W
R451	4822 051 30303	30KΩ ±5% 1/16W
R452	4822 051 30303	30KΩ ±5% 1/16W
R453	4822 051 30472	4.7KΩ ±5% 1/16W
R454	4822 051 30682	6.8KΩ ±5% 1/16W
R455	4822 100 11608	10KΩ POTM. PLL ADJUST
R456	4822 051 30102	1KΩ ±5% 1/16W
R457	4822 051 30331	330Ω ±5% 1/16W
R471	4822 051 30105	1MΩ ±5% 1/16W
R472	4822 051 30102	1KΩ ±5% 1/16W
R473	4822 051 30105	1MΩ ±5% 1/16W
R474	4822 051 30102	1KΩ ±5% 1/16W
R479	4822 051 30339	33Ω ±5% 1/16W
R480	4822 051 30339	33Ω ±5% 1/16W
R481	4822 051 30339	33Ω ±5% 1/16W
R482	4822 051 30339	33Ω ±5% 1/16W
R483	4822 051 30339	33Ω ±5% 1/16W
R484	4822 051 30339	33Ω ±5% 1/16W
R485	4822 051 30102	1KΩ ±5% 1/16W
R487	4822 051 30339	33Ω ±5% 1/16W
R488	4822 051 30339	33Ω ±5% 1/16W
R489	4822 051 30339	33Ω ±5% 1/16W
R490	4822 051 30339	33Ω ±5% 1/16W
R491	4822 051 30472	4.7KΩ ±5% 1/16W
R492	4822 051 30472	4.7KΩ ±5% 1/16W
R493	4822 051 30472	4.7KΩ ±5% 1/16W
R494	4822 051 30472	4.7KΩ ±5% 1/16W
R495	4822 051 30472	4.7KΩ ±5% 1/16W
R496	4822 051 30472	4.7KΩ ±5% 1/16W
R497	4822 051 30472	4.7KΩ ±5% 1/16W
R498	4822 051 30472	4.7KΩ ±5% 1/16W
R499	4822 051 30339	33Ω ±5% 1/16W
RJ03	4822 116 82487	0Ω ±5% 1/16W
RJ04	4822 116 82487	0Ω ±5% 1/16W

L421	4822 157 53873	100µH ±10% 40MA
L441	4822 157 53873	100µH ±10% 40MA

D421	4822 130 83231	02CZ3.6X 3.6V CHIP
Q401	4822 209 31912	SAA2001 SBF-L
Q402	4822 209 31912	SAA2001 SBF-R
Q403	4822 209 31913	SAA2021 SBC
Q404	4822 209 31914	SAA2041 DDSP
Q405	4822 209 31915	SAA2031 ERCO
Q406	4822 209 31921	MB8146464K BITX4 D-RAM PLCC
Q409	4822 209 71962	TC4538BF µPC4538BF
Q410	4822 209 31916	SAA2011 ADAS
Q411	4822 130 62522	UN2217 (22K)
Q412	4822 209 31929	74HC32
Q421	4822 130 43398	2SC2712(G) CHIP
Q422	4822 130 42733	2SA1162(G) CHIP
Q423	4822 209 31917	SAA2051 DEQ2
Q441	4822 209 31922	M51581FD FLAT
Q442	4822 209 61534	74HCU04 CMOS
Q443	4822 209 31909	NE5230D
Q444	4822 209 63381	74HC4046

Miscellaneous

J408	4822 265 31038	JACK
J409	4822 116 83251	CHECKER CHIP (RD-MUX)
J441	4822 116 83251	CHECKER CHIP (VCO- CONTROL)
J442	4822 116 83251	CHECKER CHIP (RXCK)
X401	4822 242 81345	CRYSTAL 24.576MHZ
X402	4822 242 81344	CRYSTAL 22.5729MHZ